Richard Nichols, *Chair*
Nicole Riley, *Clerk*
George Yered
Bodha B. Raut Chhetry
Alan Handel
Joshua Guerrero, Associate

TOWN OF MILLIS

OFFICE OF THE PLANNING BOARD

900 Main Street • Millis, MA 02054
Phone: 508-376-7045
Fax: 508-376-7053

Camille Standley
Administrative Assistant
cstandley@millisma.gov

October 18, 2021

The Planning Board has **approved, with conditions,** the Special Permit for/with Site Plan Approval application of Chirag Patel of GTE Millis, LLC, Brockton, Massachusetts, who requests a **Special Permit** for site plan approval pursuant to Section V, Use Regulations, Paragraph E and Section XIII, Special Permit Conditions, paragraph C, Site Plan Review; and a Special Permit for a Recreational Marijuana Establishment pursuant to Section XIII.V, of the Millis Zoning By-laws of the Town of Millis, to raze the existing industrial building and construct a new marijuana cultivation facility with associated parking areas, stormwater management system, and utility connections at 1480 & 1486 Main Street. The property which is the subject of this application is identified as Assessors Map 21, Lots 9, 26, 28, 29, 30 and Assessor Map 32 Lot 2. Property is owned by A.H. Cedar LLC, Peter Harkey. The property is zoned Industrial Park Two (I-P-2).

A copy of this decision was filed in the office of the Town Clerk of Millis on **October 18, 2021**. (Copies of this Decision available at the Planning Board's webpage: http://www.millisma.gov/planning-board)

Any person aggrieved by this decision of the Planning Board may appeal said decision pursuant to Massachusetts General Law Chapter 40A, Section 17, by bringing an action within twenty (20) days after the decision has been filed in the office of the Town Clerk. Notice of the action with a copy of the complaint shall be given to the Town Clerk so as to be received within twenty (20) days. A copy of said complaint shall be given to the Planning Board.

No variance or special permit, or any extension, modification or renewal thereof shall take effect until a copy of that decision bearing the certification of the Town Clerk that 20 days have elapsed and no appeal has been filed or that if such an appeal has been filed that it has been denied or dismissed, is recorded in the Registry of Deeds for the county or district in which the land is located and is indexed in the grantor index under the name of the owner of record or is recorded and noted on the owner's title certificate. The fee for recording or registering shall be paid by the owner or applicant.

To the Applicant: After 20 days have gone by from the above date, check with the Town Clerk's office and obtain a certified copy of the Board's decision. Be sure that the special permit/site plan is recorded at the Registry with your deed. The permit is not valid until it is recorded. A copy of the receipt or proof of recording from the Registry of Deeds must be filed with the Planning Board and Building Department when you apply for a building permit for the proposed construction. Also, prior to applying for a building permit for construction, **contact the Planning Board for endorsement of the approved site plan.**

Camille Standley
Camille Standley, Administrative Assistant

cc: Applicant, Building Dept.,BOH, Abutters, File Decision cover ltr 1480 & 1486 Main St. Cultivation 10-18-2021.doc

Richard Nichols, *Chair*
Nicole Riley, *Clerk*
George Yered
Bodha B. Raut Chhetry
Alan Handel
Joshua Guerrero, Associate

TOWN OF MILLIS

OFFICE OF THE PLANNING BOARD

900 Main Street • Millis, MA 02054
Phone: 508-376-7045
Fax: 508-376-7053

Camille Standley
Administrative Assistant
cstandley@millisma.gov

Millis Town Clerk
Received
OCT 18 2021
Kathleen E. Smith
Asst. Town Clerk

October 12, 2021

DECISION OF THE MILLIS PLANNING BOARD ON THE SPECIAL PERMIT WITH SITE PLAN APPROVAL APPLICATION SUBMITTED BY GTE MILLIS LLC C/O CHIRAG PATEL FOR 1480 & 1486 MAIN STREET

An application was filed with the Millis Town Clerk's Office on May 17, 2021, by Chirag Patel of GTE Millis LLC, Brockton, Massachusetts who requests;

1) a **Special Permit** for site plan approval pursuant to Section V, Use Regulations, Paragraph E and Section XIII, Special Permit Conditions, paragraph C, Site Plan Review;
2) a **Special Permit** for a Recreational Marijuana Establishment pursuant to Section XIII.V;

of the Millis Zoning By-laws of the Town of Millis, in order to raze the existing 7,700 SF industrial building and construct a new 73,800 SF marijuana cultivation facility with associated parking areas, stormwater management system, and utility connections at 1480 & 1480 Main Street.

The property which is the subject of this application is identified as Assessors Map 21, Lots 9, 26, 28, 29, 30 and Assessors Map 32 Lot 2. Said property is owned by A.H. Cedar LLC, Peter Harkey. The property is zoned Industrial Park Two (I-P-2).

In accordance with the provision of G. L. c. 40, Section 11, notice of hearing was published in The Milford Daily News on May 21, 2021 and May 28, 2021. Abutters to the property were properly notified of the public hearing by mail. A list of the abutters is on file in the Town Clerk's office, 900 Main Street, Millis, Massachusetts.

A public hearing in accordance with said notice was held on June 8, 2021, and continued hearings were held on July 13, 2021 (without discussion) and August 10, 2021. The public hearing was closed on September 7, 2021.

The Applicant was represented by Eric Dias, PE, Engineer, Strong Point Engineering Solutions, Inc. The consulting engineer for the Planning Board on this application was BETA Group, Inc.

The following submissions were received through the public hearing process:

- Package entitled "Special Permit Application for Site Plan Approval, Cultivation Facility, 1480 & 1486 Main Street, Millis, MA", dated May 12, 2021, applied for by GTE Millis LLC, including the following:
    - Special Permit Application Form
    - Letters of Notice: Provisional License, dated 2/11/2021 & 3/11/2021
    - Certified List of Abutters
    - 6-sheet plan set entitled "Special Permit Plans for Proposed Cultivation 1480 Main Street Millis, MA, Site Plan" dated May 17, 2021, prepared by Strong Point Engineering Solutions, Inc.
    - 1-sheet plan entitled "Schematic Design" dated May 14, 2021 prepared by 2WR+Partners
    - Project Narratives including Security Plan, Emergency Procedures, Transportation and Delivery Plan, Waste Disposal Procedures, Odor Mitigation Plan

- Email From Robert Weiss, dated May 18, 2021 re: parking
- Review Letter to Millis Planning Board, dated June 4, 2021, prepared by BETA Group, Inc.
- Email from Eric Dias, P.E., Strongpoint Engineering, dated July 7, 2021 re: continuance request
- Stormwater Report dated July 21, 2021, prepared by Strong Point Engineering Solutions, Inc., West Bridgewater, MA
- Sketch entitled SK-1 Proposed Fire Apparatus dated May 17, 2021 and revised July 21, 2021, prepared by Strong Point Engineering Solutions, Inc., West Bridgewater, MA
- 3-sheet architectural plan set entitled "Site Development Plan" dated July 21, 2021, prepared by 2WR+Partners, Centennial, CO
- 10-sheet civil plan set entitled "Site Development Plans for Proposed Cultivation Facility" dated May 17, 2021 and revised July 21, 2021, prepared by Strong Point Engineering Solutions, Inc., West Bridgewater, MA
- Response to Peer Review Comments, dated July 21, 2021, prepared by Strong Point Engineering Solutions, Inc., West Bridgewater, MA
- Email from Police Chief Soffayer, dated July 22, 2021
- Email from Fire Chief Richard Barrett, dated July 22, 2021
- Review Letter to Millis Planning Board, dated August 5, 2021, prepared by BETA Group, Inc.
- Letter from Police Chief Soffayer, dated August 10, 2021 re: security plan
- Letter from Fire Chief Richard Barrett, dated August 10, 2021 re: Emergency Access plan
- Stormwater Report dated August 27, 2021, prepared by Strong Point Engineering Solutions, Inc., West Bridgewater, MA
- Response to Peer Review Comments, dated August 27, 2021, prepared by Strong Point Engineering Solutions, Inc., West Bridgewater, MA
- 11-sheet civil plan set entitled "Site Development Plans for Proposed Cultivation Facility" dated May 17, 2021 and last revised September 1, 2021, prepared by Strong Point Engineering Solutions, Inc., West Bridgewater, MA

- Response to Peer Review comments, dated September 1, 2021, prepared by Strong Point Engineering Solutions, Inc., West Bridgewater, MA
- Review Letter to Millis Planning Board, dated September 2, 2021, prepared by BETA Group, Inc.

****

FINDINGS

Regarding the requests for Special Permits, Section XII.Q of the Zoning By-Laws of the Town of Millis requires the following general conditions to be fulfilled prior to the granting of an application for a special permit:

(a) Special permits shall only be issued following public hearings held within 65 days after filing an application with the Special Permit Granting Authority, a copy of which shall be given forthwith to the Town Clerk by the Applicant.

Finding: The application was filed with the office of the Town Clerk on May 17, 2021; and the initial public hearing was held on June 8, 2021. The Planning Board therefore finds that this requirement has been met.

(b) The use requested by the Applicant is listed in the Table 1 Use Regulations of the Millis Zoning By-laws as a special permit in the district for which application is made or is so designated elsewhere in the By-laws.

Finding: The use of marijuana cultivation facility is allowed in the Industrial Park Two (I-P-2) Zoning District where it is being proposed with authorization by Special Permit with Site Plan Approval from the Planning Board. The Planning Board therefore finds that this requirement has been met.

(c) The requested use is essential or desirable to the public convenience or welfare.

Finding: The Board finds that the proposed use will revitalize the site that been dormant for years, resulting in financial benefit to the Town through taxes and utilities. The use will increase economic development consistent with Town planning goals and provide employment opportunities. The Board therefore finds that the proposed development is desirable to the public convenience and welfare.

(d) The requested use will not create undue traffic congestion, or unduly impair pedestrian safety.

Finding: It is anticipated that at peak operating hours there will be approximately 70 employees in the cultivation area and 20 employees in the office area. It is also anticipated that the site will house approximately 5-10 commercial vehicles (vans) for delivery of product. The site is located on Main Street, a major thoroughfare, with the

proposed use typical in regards to traffic generation for the industrial area. An existing sidewalk runs along the opposite side of Main Street from the property, thus pedestrian traffic will not be compromised. The requested use is therefore not anticipated to create undue traffic congestion, or unduly impair pedestrian movement, and the Planning Board finds that this requirement has been met.

(e) The requested use will not overload any municipal services to such an extent that the requested use or any developed use in the immediate area or in any other area of the Town will be unduly subject to hazards affecting health, safety, or the general welfare.

Finding: The site was previously connected to existing municipal water and sewer systems and will again be connected for the proposed use. The water consumption projections for the cultivation operations have been provided to the Department of Public Works and confirmed available with the existing service. Flow tests were performed and indicated that a water system pump on-site will most likely be required. The applicant has indicated they will work with the Department of Public Works and Fire Department for approval on flows once the actual water demands are calculated. The applicant has also indicated they have submitted an application to the Charles River Pollution Control District for discharge to the sanitary sewer and will provide CRPCD consent to the Board. The applicant is required to obtain review and approval of all security plans, emergency procedures and transportation and delivery plans with the Millis Police and Fire Chiefs for the project. Based on the imposition of conditions noted hereafter, the Planning Board finds this requirement has been met.

(f) Any special regulations for the use set forth in Section XI (Special Flood Hazard District), are fulfilled.

Finding: A portion of the site is located in a Zone A flood zone that does not have a determinate base flood elevation. The Applicant has filed a Letter of Map Amendment with FEMA to have the flood area delineation evaluated and removed from the portion of the site. Based on the conditions noted hereafter, the Planning Board finds this requirement has been met.

(g) The requested use will not impair the integrity or character of the district or adjoining zones, not be detrimental to the health, morals, or welfare.

Finding: The requested use of a cultivation facility is allowed by Special Permit in the I-P-2 zoning district. The site is in an established commercial & industrial area. There is a portion of the property parcel that is not proposed for development abutting the Commercial District to the south along Main Street and Residential-Suburban District to the southeast. This provides a buffer between the facility and the Residential-Suburban District. The applicant proposes to implement odor and noise control systems and agrees that a specialist in odor and noise shall review the proposed plans for these systems to ensure compliance with regulations prohibiting

nuisance. Based on the plan submitted along with the imposition of conditions noted hereafter, the Planning Board finds that this requirement has been met.

(h) A special permit granted under the provision of the Millis Zoning by-laws shall lapse within one year, and including such time required to pursue or await the determination of an appeal, from the grant thereof, if a substantial use thereof has not sooner commenced except for good cause or, in the case of permit for construction, if construction has not begun by such date except for good cause.

Finding: The Applicant shall adhere to such requirements and the Planning Board therefore finds that this requirement has been met.

****

Section XIII.C.5 of the Zoning By-laws of the Town of Millis requires the following matters be evaluated prior to the granting of an application for Site Plan Review:

(a) Protection of adjoining premises against detrimental uses by provision for surface water drainage, sound and sight buffers and preservation of views, light and air.

Finding: The Applicant has proposed an appropriate stormwater management system design to address surface water drainage. A site lighting plan is provided and appropriate for the use and area. Landscaping is proposed in front of the building along Main Street. The Planning Board finds this requirement has been met.

(b) Convenience and safety of vehicular and pedestrian movement within the site, the location of driveway openings in relation to traffic or adjacent streets and, when necessary, compliance with other regulations for the handicapped, minors and the elderly.

Finding: The new building will have access off Main Street, which is a main road suitable for the proposed type of vehicular traffic. The proposed driveway is adequate for the intended use and provides appropriate site distance in both directions. Pedestrian movement within the site is limited to employees as this site is closed to the public. The Millis Fire Chief has reviewed site plans and provided a letter indicating that emergency access to the site is adequate. Based on the plan submitted with the imposition of conditions noted hereafter, the Planning Board finds that this requirement has been met.

(c) Protection and enhancement of existing site features.

Finding: Site work will remain outside of the 50-ft wetland buffer and the applicant has indicated they will be submitting a Notice of Intent application for review by the Millis Conservation Commission. The applicant has submitted a Letter of Map Amendment with FEMA to have the flood area delineation evaluated and removed from the portion of the site. Once available, the FEMA determination shall be provided to the Board. The existing site features an abandoned building and parking lot, this condition will be improved with the development of the site. Based on the plan submitted along with the

imposition of conditions noted hereafter, the Planning Board finds that this requirement has been met.

(d) Adequacy of the arrangement for parking and loading spaces in relation to the proposed use of the premises.

Finding: The new building and site layout will provide an appropriate number of parking spaces and includes handicap spaces. Waivers are being requested for parking space size, number of loading spaces and parking lot tree plantings due to the nature of the facility. A cultivation facility has unique conditions and operations and is not open to the public therefore with the imposition of conditions noted hereafter, the Planning Board finds that this requirement has been met.

(e) Adequacy of the methods of disposal of refuse and other wastes resulting from the uses permitted on the site.

Finding: The disposal of refuse from the operations of the proposed use are regulated through the Massachusetts Cannabis Control Commission (CCC). Strict procedures are required for storage and disposal of refuse. Based on the plan submitted with the imposition of conditions noted hereafter, the Planning Board finds that this requirement has been met.

(f) Relationship of structures and open spaces to the natural landscape, existing buildings and other community assets in the area and compliance with other requirements of the by-law.

Finding: The proposed development is consistent with surrounding commercial and industrial uses. Demolition of the existing abandoned building and parking lot is an improvement for the site. In addition, an appropriate landscaping plan has been provided for the frontage on Main Street. The Planning Board therefore finds this requirement has been met.

(g) Protection of environmental features, particularly groundwater resources, on the site and in adjacent areas, adequate protection to prevent pollution of surface and groundwater, soil erosion, increase runoff, changes in groundwater recharge or elevation and flooding.

Finding: The Applicant has proposed a stormwater management system which provides the collection, treatment, and infiltration of stormwater runoff in accordance with state and local requirements. Construction-stage erosion controls will be implemented to prevent soil erosion during construction. Based on the plan submitted along with imposition of conditions noted hereafter, the Planning Board therefore finds this requirement has been met.

****

Section XIII.V of the Zoning By-laws of the Town of Millis requires the following matters be evaluated prior to the granting of an application for a Recreational Marijuana Establishment:

(a) Section XIII.V.2a Location.

Finding: The proposed facility is surrounded by existing commercial & industrial uses and wetlands areas. None of the uses identified in XIII.V.2a(1&2) lie within 500 or 1,500 feet of the site (as applicable). The Planning Board therefore finds that this requirement has been met.

It is further noted that the applicant has agreed to submit copies of the various documents required by Section XIII.V upon issuance of a license by the CCC. The applicant has agreed that a specialist in odor and noise shall review the proposed construction drawings and stamped MEP plans for the facility to ensure compliance with Section XIII.V.4 Prohibition Against Nuisance. The applicant requests that the nuisance review be listed as a condition of this permit with review and approval to be issued through the Board of Health Environmental Health Impact Report review to make the final determination that the Application has satisfied the condition.

****

WAIVERS REQUESTED

At the public hearing on October 12, 2021, the Planning Board granted the following waivers from the Town of Millis Zoning By-Law requested by the applicant:

1. A wavier from Section VIII Table 5 Off-Street Loading Standards of the Off-Street Parking and Loading Regulations Bylaw, to allow 2 loading spaces, where 5 loading spaces are required.

2. A waiver is sought from Section VIII C.2.f&p Parking and Loading Lot Standards, of the Off-Street Parking and Loading Regulations Bylaw, to allow the planting of 9 trees, where 46 trees are required. The 9 trees shall be a mix of evergreen and deciduous trees to ensure year-round foliage and a donation of $700/tree will be made to the Town of Millis Tree Fund for the remaining 37 trees for a total donation of $25,900.

The Planning Board rejected the following waiver from the Town of Millis Zoning By-Law requested by the applicant on the basis that the Planning Board does not have the Authority to act on the request:

1. A wavier from Section II, definition of Parking Space, to allow the space size of 10 feet in width by 20 feet in length, having an area of 200 SF.

****

DECISION

At a meeting held on October 12, 2021, acting upon a motion of Mr. Richard Nichols and seconded by Ms. Nicole Riley, with Mr. George Yered, Mr. Richard Nichols, Ms. Nicole Riley, Mr. Alan Handel, and Mr. Joshua Guerrero voting in the affirmative, it was unanimously voted to grant to the Applicant, GTE Millis LLC, a **Special Permit** for/with site plan approval for the property located at 1480 & 1486 Main Street, said location as described herein and on the plans. The site and the approved improvements are depicted on an eleven-sheet plan set entitled Site Development Plans for Proposed Cultivation Facility, dated May 17, 2021, revised September 1, 2021, prepared by Strong Point Engineering Solutions, West Bridgewater, MA (hereinafter referred to as the "Approved Site Plan"). Site plan approval is subject to the following conditions:

Special Permit Standard Conditions

1. All necessary approvals from other Town Boards and Commissions must be obtained by the Applicant. Proof of said approvals, where needed, shall be forwarded to the Millis Planning Board. Approvals and/or permits shall reference the Approved Site Plan.

2. All provisions of the Millis Zoning By-laws shall be observed unless otherwise approved herein, authorized by variance from the Millis Zoning Board of Appeals, or authorized by a Determination pursuant to M.G.L. Chapter 40A, Section 6 that such pre-existing non-conforming uses may remain or be expanded and/or modified.

3. The development shall be constructed in substantial compliance with the Approved Site Plan unless otherwise modified by the Planning Board or by the conditions enumerated herein.

4. This special permit granted under the provisions of the Millis Zoning By-law shall lapse within two (2) years from the filing of this decision with the Town Clerk, and including such time required to pursue or await the determination of an appeal from the grant thereof. If the Applicant, for good cause, needs to be granted extensions for periods of one (1) year at a time for completion of the project, such an extension will not be unreasonably withheld.

5. This permit is for the razing of the existing industrial building onsite and the construction of a 73,800 SF marijuana cultivation facility, with associated parking areas, stormwater management system and utility connections, all as shown on the Approved Site Plan. Any desired changes in use must be submitted to the Board for review and determination as to whether an amendment or modification of the permit is required. The location and footprint of the building shall be substantially as shown on the Approved Site Plan.

6. The land which is the subject of this Special Permit shall not be further subdivided without the prior approval of the Planning Board.

7. The Planning Board and any of its representatives shall be allowed to inspect the premises at any time.

Construction Methodology Conditions

8. The Applicant shall identify the name, address, and phone number of the contact person for construction management of the project. Said contact person shall be available 24 hours per day, seven days per week throughout construction. This information shall be provided to the dispatcher's office of the Millis Police and Fire Departments, the office of the Department of Public Works, and any other department deemed necessary by the Planning Board. In addition, this information should be posted in a prominent location on the required temporary construction fencing.

9. Prior to the start of construction, the Applicant shall conduct a pre-construction meeting with the Director of the Department of Public Works AND any other persons the Planning Board deems appropriate.

10. The Applicant shall be responsible for payment of professional outside consultant assistance that the Board deems necessary for inspection, etc., upon invoice from the Board. A Scope & Fee for construction inspection services to be paid for by the Applicant shall be agreed upon and signed by the Applicant and the Town of Millis prior to the start of construction.

11. No construction shall be started prior to 7:00 A.M. or continue beyond 6:00 P.M. No work will be permitted on the site on Sundays or on holidays observed in Norfolk County, Massachusetts unless approved by the Building Inspector. A clearly visible 6" lettering sign stating these construction activity hours shall be posted at the construction entrance.

12. The approved limit of work shall be field staked by a land surveyor prior to demolition and clearing and shall be marked with perimeter controls as noted on the Approved Site Plan for the duration of construction activities.

13. All construction activities shall proceed in accordance with the provisions of the documents of the Stormwater Pollution Prevention Plan (SWPPP) that will be prepared by Strong Point Engineering Inc. The SWPPP document shall be updated with the final names of the site contractor, the EPA Notice of Intent and any other incomplete information and shall submit a copy to the Planning Board.

14. Installation of erosion control devices shall precede all other construction. Flooding of abutting properties during construction shall not be allowed.

15. Areas of disturbance shall be limited to the greatest extent practical. Disturbed areas that will not be built upon, paved, or grassed within 14 days shall be temporarily stabilized

with grass. Areas of disturbance, including stockpiling areas shall be protected by temporary erosion controls and fencing throughout construction.

16. There shall be no loading/unloading or stacking of construction equipment and materials or idling of delivery trucks during construction on Main Street. There shall be no idling of delivery trucks during construction either within the project site or on adjacent streets. Truck and machine idling as governed by MGL Chapter 90 Section 16-A. Activities along Main Street must meet the approval of the Police Chief. A sign stating these conditions shall be posted at the construction entrance.

17. Main Street shall remain clean at all times and shall be swept as needed. Construction entrances are required to be installed and maintained at all vehicle access points.

18. A dumpster shall be maintained on-site throughout construction. All trash shall be collected daily and deposited in the dumpster. No trash shall be buried on-site.

19. If it is determined by the Board that construction related dust is excessive, remediation shall be implemented within 24 hours. Dust control shall be by water truck. Calcium chloride shall not be allowed.

20. Confirmatory test pits during construction mobilization are required and shall be witnessed by a representative of the Town. Observation of subsoil by a representative of the Town once infiltration fields are excavated to subgrade and prior to the installation of the systems is required to determine whether soils and groundwater are consistent with assumptions made in the stormwater report.

<u>Post-Construction Conditions</u>

21. All future use of the site shall be in accordance with the provisions of the document submitted by the Applicant entitled "Stormwater Management System Operations & Maintenance Plan Proposed Marijuana Cultivation Facility 1480 Main Street Millis, Massachusetts" prepared by Strong Point Engineering Solutions, Inc., dated July 21, 2021 and revised August 27, 2021. The plan with signature of the owner/operator shall be provided to the Board prior to occupancy and future responsible parties shall be notified of their continuing legal responsibility to operate and maintain the stormwater management system.

22. The property owner shall maintain on-site files including records of inspection, maintenance, and corrective actions for work performed in accordance with the operations and maintenance requirements prepared by the Applicant. Such files shall be available for inspection by the Town.

23. An "as-built" plan shall be submitted for approval to the Planning Board prior to occupancy. Among other things, the As-built plan shall show the location and detail of all drainage and utility systems and shall include ties to water and sewer curb stops. As-built plans shall be accompanied by a written statement certifying substantial compliance

with the Approved Plans. The statement shall note any deviation from the Approved Plans as part of this permit, shall be written by a Professional Engineer and shall include the dates of inspection(s). Facility shall not be allowed partial occupancy at any time without the approval of the Planning Board.

Site Specific Special Permit Conditions

24. Final signage will be in accordance with Section VII Signs and will be permitted through the Inspector of Buildings.

25. A portion of the site is located in a Zone A flood zone that does not have a determinate base flood elevation. The Applicant has filed a Letter of Map Amendment with FEMA to have the flood area delineation evaluated and removed from the portion of the site. Once available, the FEMA determination shall be provided to the Board.

26. A copy of the provisional license issued by the Massachusetts Cannabis Control Commission shall be submitted to the Board prior to the start of construction, including all information requested in Section XII.Q (d-h).

27. This Decision is contingent upon the Applicant satisfying all requirements of the Board of Health, including requirements relating to noise and odor. Accordingly, no building permits may be issued unless or until the proposed construction drawings and stamped MEP plans for the facility are presented to, reviewed and approved by the Board of Health and their chosen specialist(s) on noise and/or odor through the Environmental Health Impact Report review process. The Applicant shall bear the expense of such review and shall fully cooperate with the Board of Health and their peer review specialist(s). Upon submission of all required and reasonably requested information, and after review and presentation of the noise and odor specialist(s) findings, the Board of Health shall determine if the project will meet the requirements of the local regulations relative to nuisance including prohibitions against nuisance, as contained in Section XIII.V.4 of the Zoning By-laws.

28. Water system design, once finalized, will be subject to Millis DPW approval. The Applicant shall obtain written approval from Millis DPW and Fire Department and provide to the Board for its records prior to construction.

29. The Applicant shall file with the Charles River Pollution Control District for discharge to the sanitary sewer and provide CRPCD consent to the Board prior to the start of construction.

30. Design of the retaining wall shall be stamped and signed by a structural engineer prior to construction.

31. The applicant shall either seek a variance from the Zoning Board of Appeals or bring the site plan into conformity with the requirement for parking space dimensions to provide the minimum space size of 10 feet in width by 20 feet in length. This shall be done while

maintaining all other Off-Street Parking requirements of the Zoning Bylaw Section VIII including but not limited to number of spaces required for the use, driving lane widths and lot line setbacks. The revisions shall be to the satisfaction of the Millis Fire Chief for emergency vehicle access and the Planning Board for consistency with the Site Plan and Special Permit requirements. The Planning Board may consult with its engineer at the Applicant's expense to determine whether any such plan changes are consistent with applicable technical requirements and best management practices. In the event that the Planning Board determines that any such revisions are substantial in nature, a public hearing may be required.

Special Permit Conditions on Marijuana Establishments (Section XIII.V.3)

32. The permit holder, or the Marijuana Establishment Agent, as defined by 935 CMR 500.002, shall file a copy of any Incident Report required under 935 CMR 500.000 with the Zoning Enforcement Officer and the Planning Board within 24 hours of creation by the Marijuana Establishment. Such reports may be redacted as necessary to comply with any applicable state or federal laws and regulations.

33. The permit holder, or the Marijuana Establishment Agent, shall file a copy of any deficiency statement, plan of correction, limitation of sales, summary cease and desist order, cease and desist order, quarantine order, summary suspension order, notice of violation, notice of hearing, and notice of final action issued by the CCC, or any other adjudicatory agency, as applicable, regarding the Marijuana Establishment, with the Zoning Enforcement Officer and Planning Board within 48 hours of receipt by the Marijuana Establishment or Marijuana Establishment Agent.

34. The permit holder, or the Marijuana Establishment Agent, shall provide to the Zoning Enforcement Officer and Chief of the Police Department, the name, telephone number, and electronic mail address of the Marijuana Establishment Agent in the event that such person needs to be contacted after regular business hours to address an urgent issue. Such contact information shall be kept updated by the permit holder and the Marijuana Establishment Agent.

35. The special permit shall be limited to the original applicant and is not transferrable without a hearing and Vote of the Planning Board to modify this Special Permit and Site Plan Approval, with such hearing to consider the suitability of the Transferee as well as any other conditions that the Planning Board may reasonably impose under the Zoning Bylaws.

36. The special permit shall lapse if the permit holder ceases operation of the Marijuana Establishment for a period of ninety (90) days, or upon the expiration, termination or nonrenewal of the applicant's license issued by the CCC.

37. The permit holder, or the Marijuana Establishment Agent, shall annually provide the Zoning Enforcement Officer and the Planning Board with a copy of the renewed license

issued by the CCC, as well as any modification of the existing license, as approved by the CCC.

38. The permit holder, or the Marijuana Establishment Agent, shall notify the Zoning Enforcement Officer and Planning Board in writing within 48 hours of the cessation of operation of the Marijuana Establishment or the expiration, termination or nonrenewal of the license issued by the CCC.

39. No marijuana shall be smoked, eaten, or otherwise consumed or ingested on the premises.

40. As stated in Mass General Laws, Chapter 90, Section 16A, no person shall cause, suffer, allow or permit the unnecessary operation of the engine of a motor vehicle while said vehicle is stopped for a foreseeable period of time in excess of five minutes. All conditions of this section apply to the permit holder.

MILLIS PLANNING BOARD:

Richard Nichols Chair	✓ Approve	___ Deny	___ Abstain
Nicole Riley Clerk	✓ Approve	___ Deny	___ Abstain
George Yered Member	✓ Approve	___ Deny	___ Abstain
Bodha B. Raut Chhetry Member	___ Approve	___ Deny	___ Abstain
Alan Handel Member	✓ Approve	___ Deny	___ Abstain
Joshua Guerrero Associate Member	✓ Approve	___ Deny	___ Abstain

DATE VOTED: October 12, 2021

DATED FILED WITH THE OFFICE OF THE TOWN CLERK: October 18, 2021

APPEALS FROM THIS DECISION, IF ANY, SHALL BE MADE PURSUANT TO GENERAL LAWS CHAPTER 40A, SECTION 17, AND SHALL BE FILED WITHIN TWENTY (20) DAYS AFTER THE DATE THIS DECISION IS FILED IN THE OFFICE OF THE TOWN CLERK.

SITE DEVELOPMENT PLANS
FOR
PROPOSED CULTIVATION FACILITY
1480 MAIN STREET
MILLIS, MASSACHUSETTS
MAP 21 LOTS 9, 26, 28, 29, 30
MAP 32 LOT 2

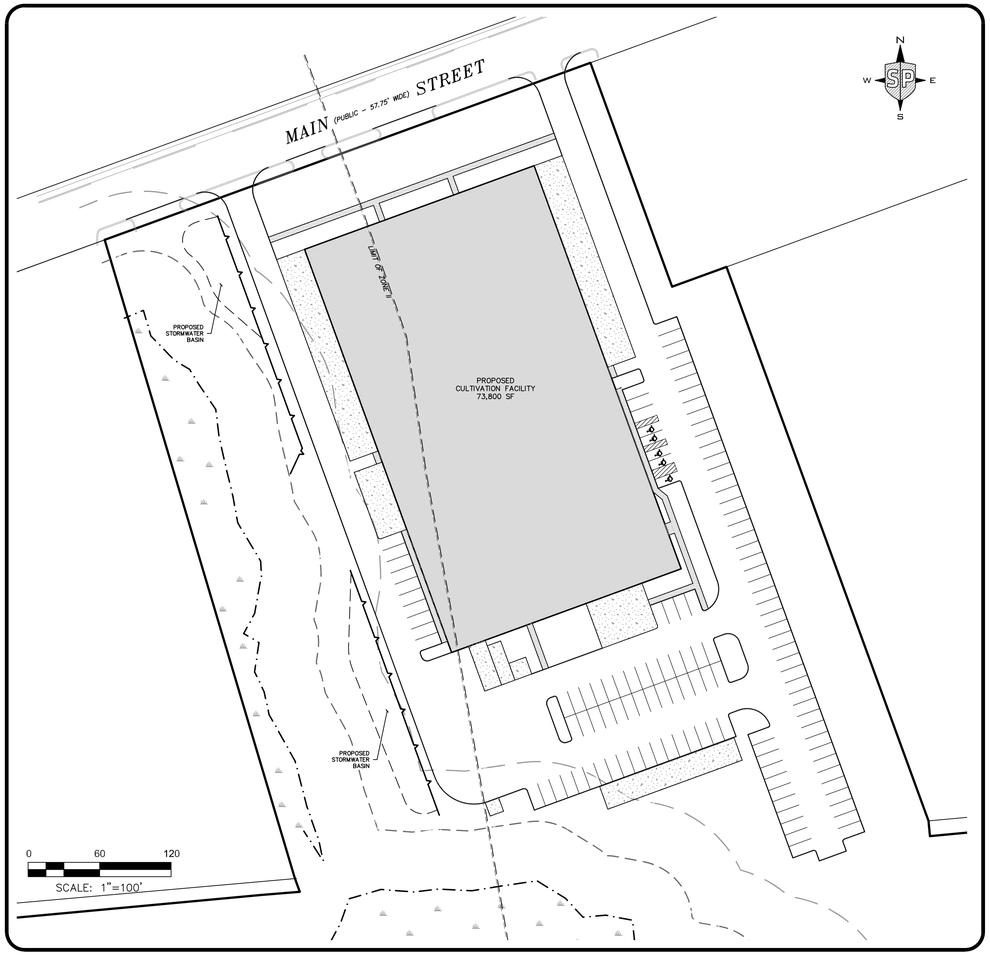

OWNER:

A.H. CEDAR, LLC.
256 ORCHARD STREET
MILLIS, MA 02054

APPLICANT:

GTE MILLIS, LLC.
251 N. PEARL STREET
BROCKTON, MA 02301

CIVIL ENGINEER:

STRONGPOINT
ENGINEERING SOLUTIONS, INC
340 MANLEY STREET, UNIT 2
WEST BRIDGEWATER, MA 02379
(508) 682-0229

SURVEYOR

KLIM Land Surveying, Inc.
340 Manley Street, Unit 3
West Bridgewater, MA
508-980-0824

SHEET INDEX

SHEET:	NAME:	ISSUED:	REVISED:
C-1	EXISTING CONDITIONS PLAN	05/17/21	08/27/21
C-2	PROPOSED SITE LAYOUT PLAN	05/17/21	08/27/21
C-3	PROPOSED GRADING & UTILITY PLAN	05/17/21	09/01/21
C-4	PROPOSED EROSION CONTROL PLAN	05/17/21	09/0121
L-1	PROPOSED SITE LIGHTING PLAN	05/17/21	08/27/21
D-1	DETAIL SHEET	07/21/21	08/27/21
D-2	DETAIL SHEET	07/21/21	08/27/21
D-3	DETAIL SHEET	07/21/21	09/03/21
D-4	DETAIL SHEET	07/21/21	08/27/21
P-1	PLANTING PLAN	07/30/21	--

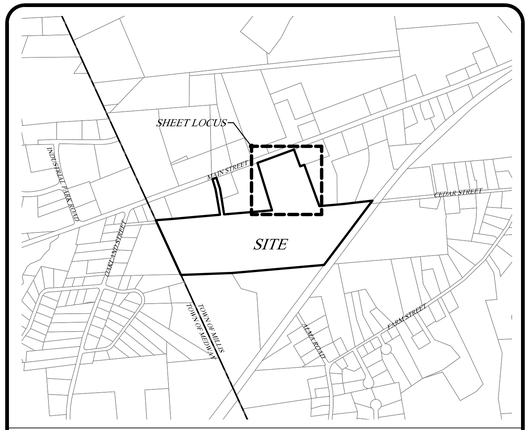

GIS SITE LOCUS SCALE: 1"=800'

PROFESSIONAL ENGINEER FOR
STRONG POINT ENGINEERING SOLUTIONS, LLC

ISSUED FOR REVIEW
NOT FOR CONSTRUCTION

EXISTING FEATURES

- PROPERTY BOUNDARY
- INT. PROP. BOUNDARY
- EASEMENT BOUNDARY
- WETLAND BOUNDARY
- A1 WETLAND FLAG
- 50' BUFFER
- 100' BUFFER
- FLOOD PLAIN BOUNDARY
- ZONE II BOUNDARY
- BUILDING
- EDGE OF PAVEMENT
- CURBING
- CONCRETE PAD
- FENCE LINE
- TREELINE
- CATCH BASIN
- DRAIN MANHOLE
- D DRAIN LINE
- SEWER MANHOLE
- S SEWER LINE
- HYDRANT
- W WATER LINE
- UTILITY POLE
- OHW OVERHEAD WIRES
- G GAS LINE
- INDEX CONTOUR
- INTERMEDIATE CONTOUR
- TEST PIT
- LCB LAND COURT BOUND
- SB/DH STONE BOUND W/DRILL HOLE
- DH DRILL HOLE

NOTES

1. BOUNDARY SHOWN IS THE RESULT OF AN ON-THE-GROUND SURVEY PERFORMED BY KLIM LAND SURVEYING, INC. IN NOVEMBER 2020.

2. WETLANDS DELINEATION PERFORMED BY ENVIRONMENTAL CONSULTING AND RESTORATION, LLC. IN OCTOBER 2020.

3. TOPOGRAPHY AND EXISTING CONDITIONS FEATURES TAKEN FROM PLAN SET ENTITLED "PERMIT SITE DEVELOPMENT PLANS FOR 1480 MAIN STREET LOCATED IN MILLIS, MA" PROVIDED BY OTHERS.

4. TEST PIT DATA TAKEN FROM ABOVE REFERENCED PLAN. REFER TO DETAILS SHEETS FOR LOGS.

5. SITE IS LOCATED IN A INDUSTRIAL PARK 2 DISTRICT.

6. THE SITE IS PARTIALLY LOCATED WITHIN A ZONE II AS SHOWN.

7. SITE IS NOT LOCATED WITHIN ESTIMATED/PRIORITY HABITAT FOR RARE SPECIES AS MAPPED BY MANHESP.

8. SITE DOES NOT CONTAIN ANY CERTIFIED VERNAL POOL AS MAPPED BY MANHESP.

9. SITE IS NOT LOCATED WITHIN AN AREA OF CRITICAL ENVIRONMENTAL CONCERN.

10. VERTICAL DATUM IS NAVD 29.

11. THE CONTRACTOR IS SPECIFICALLY CAUTIONED THAT THE LOCATIONS/AND OR ELEVATIONS OF EXISTING UTILITIES AND STRUCTURES SHOWN ON THESE PLANS ARE BASED ON THE RECORDS OF VARIOUS UTILITY COMPANIES AND WHERE POSSIBLE, MEASUREMENTS TAKEN IN THE FIELD. THIS INFORMATION IS NOT TO BE RELIED ON AS BEING EXACT NOR COMPLETE. THE LOCATIONS AND ELEVATIONS OF ALL UNDERGROUND UTILITIES AND STRUCTURES SHALL BE VERIFIED IN THE FIELD BY THE CONTRACTOR PRIOR TO THE START OF CONSTRUCTION.

12. ZONE A FLOOD PLAIN SHOWN AS TAKEN FROM FEMA FIRM PANEL 25021C0142E DATED JULY 17, 2012.

40 0 20 40 80 160

GRAPHICAL SCALE: 1" = 40'

COMMONWEALTH OF MASSACHUSETTS
LUCAS E. KLIM
NO. 50369
REGISTERED PROFESSIONAL LAND SURVEYOR

PROFESSIONAL LAND SURVEYOR FOR
KLIM LAND SURVEYING, INC

COMMONWEALTH OF MASSACHUSETTS
ERIC D DIAS
CIVIL
No. 48158
REGISTERED PROFESSIONAL ENGINEER

PROFESSIONAL ENGINEER FOR
STRONG POINT ENGINEERING SOLUTIONS, INC

REV	DESCRIPTION	DATE
2	REVIEW COMMENTS	08/27/21
1	SITE PLAN REVIEW	07/21/21

STRONGPOINT
ENGINEERING SOLUTIONS, INC
340 MANLEY STREET, UNIT 2
WEST BRIDGEWATER, MA 02379
(508) 682-0229

PROJECT NUMBER:	2009-006
DATE OF ISSUE:	MAY 17, 2021
SCALE:	1"=40'
DRAFTED BY: SH/MH	CHECKED BY: ED

PREPARED ON BEHALF OF:

GTE MILLIS, LLC.
251 N. PEARL STREET
BROCKTON, MA 02301

SPECIAL PERMIT PLAN
FOR
PROPOSED CULTIVATION FACILITY
1480 MAIN STREET
MILLIS, MA

EXISTING CONDITIONS PLAN

C-1

ISSUED FOR REVIEW
NOT FOR CONSTRUCTION

COPYRIGHT © 2021 STRONG POINT ENGINEERING SOLUTIONS, INC.

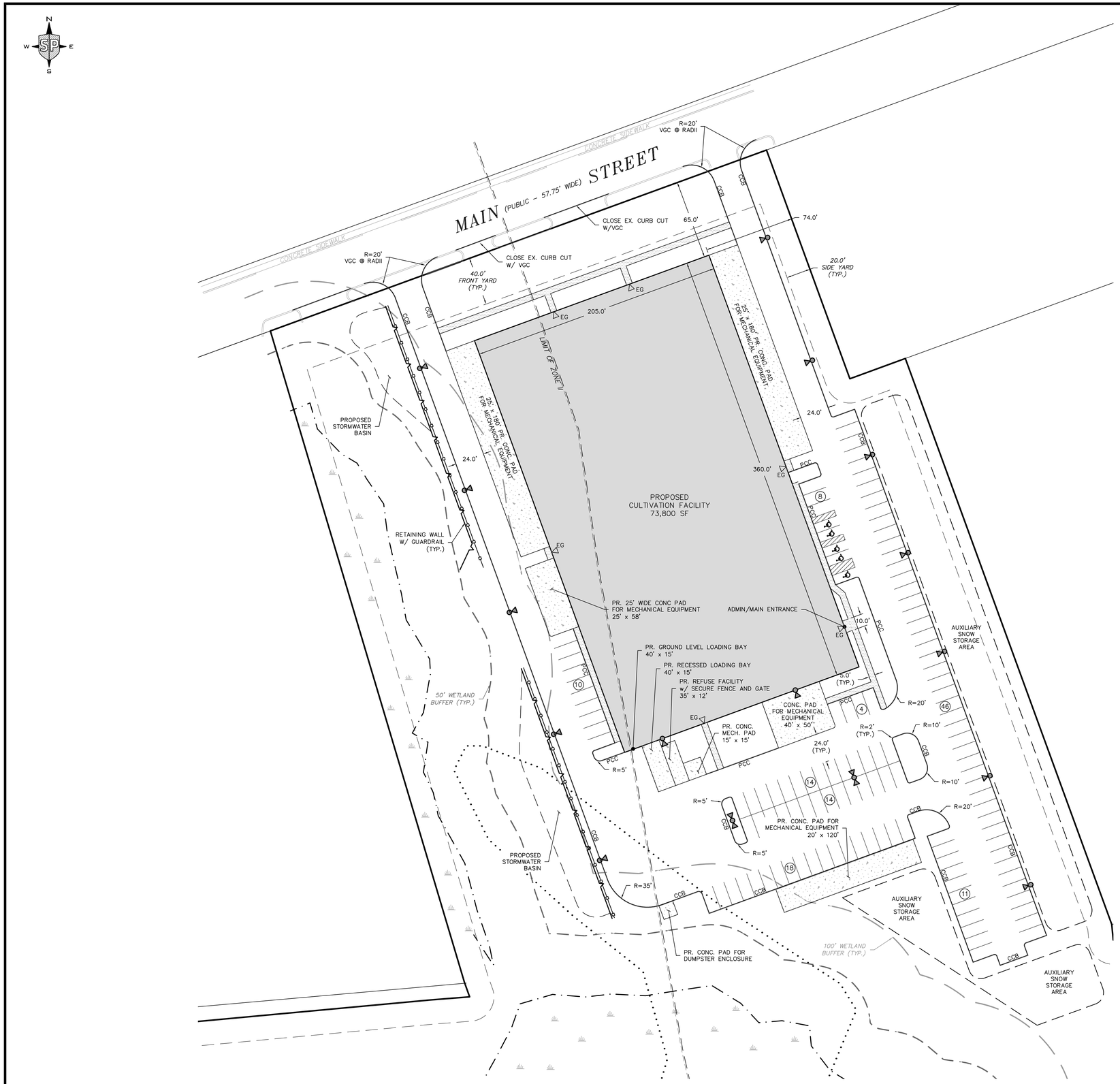

EXISTING FEATURES

- PROPERTY BOUNDARY
- PROPERTY SETBACK
- WETLAND BOUNDARY
- 50' BUFFER
- 100' BUFFER
- FLOOD PLAIN BOUNDARY
- ZONE II BOUNDARY

PROPOSED FEATURES

- BUILDING
- CONCRETE PAD
- EDGE OF PAVEMENT
- CURB
- SIDEWALK
- RETAINING WALL
- GUARDRAIL
- SITE LIGHT
- STORMWATER AREA
- ADA ACCESSIBLE STALL
- (4) STALL COUNT
- VGC VERTICAL GRANITE CURB
- PCC PRECAST CONCRETE CURB
- CCB CAPE COD BERM

NOTES

1. BUILDING FOOTPRINT SHOWN IS INDICATIVE OF SLAB FLOOR. SEE ARCHITECTURAL PLAN FOR ADDITIONAL INFORMATION REGARDING BUILDING DESIGN.
2. ALL BUILDING DIMENSIONS TO BE CONFIRMED WITH THE PROJECT ARCHITECTURAL PLANS, INCLUDING ANY AND ALL POINTS OF INGRESS & EGRESS.
3. THE CONTRACTOR SHALL ADJUST AND/OR CUT EXISTING PAVEMENT AS NECESSARY TO ENSURE A SMOOTH FIT AND CONTINUOUS GRADE BETWEEN EXISTING AND PROPOSED SURFACES.
4. ALL CURB DIMENSIONS AND RADII REFERENCE FACE OF CURB UNLESS OTHERWISE NOTED.
5. LIMIT OF DISTURBANCE SHALL BE THE MINIMUM REQUIRED TO ACCOMPLISH THE PROPOSED WORK.
6. ALL DISTURBED AREAS NOT PROPOSED FOR OTHER SURFACE TREATMENT TO BE LOAMED AND SEEDED.
7. ALL PROPOSED STANDARD PARKING STALLS MEASURE 10' x 20'.
8. SNOW SHALL BE PUSHED TO THE SIDES OF THE PAVED AREAS TO THE MAXIMUM EXTENT PRACTICABLE AND/OR STORED IN THE AUXILIARY SNOW STORAGE AREA SHOWN. SNOW SHALL NOT BE STORED WITHIN ANY STORMWATER MANAGEMENT AREA OR OVER ANY STORMWATER CONVEYANCE.
9. RETAINING WALL DESIGN TO BE STAMPED AND SIGNED BY A STRUCTURAL ENGINEER AND SUBMITTED TO THE TOWN PRIOR TO CONSTRUCTION.

ZONING SCHEDULE: INDUSTRIAL PARK 2

	REQUIRED	PROVIDED
MIN. LOT AREA	43,560 SF	1,619,877 SF
MIN. FRONTAGE	200 FT	434 FT
MIN. LOT DEPTH	250 FT	1,254 FT
FRONT YARD	40 FT	65 FT
SIDE YARD	20 FT	74 FT
REAR YARD	30 FT	826 FT
MAX. BLDG. COVER.	40%	4.6%
MAX. BLDG. HEIGHT	45 FT	<45 FT

PARKING REQUIREMENTS SCHEDULE

INDUSTRIAL ESTABLISHMENT: 1 STALL PER 600 SF NET FLOOR AREA

73,800 SF NET FLOOR AREA / 600 SF = 123 STALLS

125 STALLS PROVIDED

REQUIRED ACCESSIBLE STALLS = 5

PROVIDED ACCESSIBLE STALLS = 5

WAIVERS REQUESTED

THE FOLLOWING WAIVERS ARE REQUESTED FROM CERTAIN SECTION OF THE TOWN OF MILLIS ZONING BYLAWS.

SECTION	WAIVER
SECTION II	ALLOW STANDARD PARKING STALLS TO MEASURE 10' x 20' (200 SF)
SECTION VIII TABLE 5	ALLOW LOADING STALLS AS SHOWN
SECTION VIII C.2.f&p	ALLOW REDUCTION IN NUMBER OF REQUIRED TREES

40 0 20 40 80 160

GRAPHICAL SCALE: 1" = 40'

ISSUED FOR REVIEW
NOT FOR CONSTRUCTION

COMMONWEALTH OF MASSACHUSETTS
ERIC D DIAS
CIVIL
No. 49158
REGISTERED PROFESSIONAL ENGINEER

PROFESSIONAL ENGINEER FOR
STRONG POINT ENGINEERING SOLUTIONS, INC

REV	DESCRIPTION	DATE
2	REVIEW COMMENTS	08/27/21
1	SITE PLAN REVIEW	07/21/21

STRONGPOINT
ENGINEERING SOLUTIONS, INC
340 MANLEY STREET, UNIT 2
WEST BRIDGEWATER, MA 02379
(508) 682-0229

PROJECT NUMBER:	2009-006
DATE OF ISSUE:	MAY 17, 2021
SCALE:	1"=40'
DRAFTED BY: SH/MH	CHECKED BY: ED

PREPARED ON BEHALF OF:

GTE MILLIS, LLC.
251 N. PEARL STREET
BROCKTON, MA 02301

SPECIAL PERMIT PLAN FOR PROPOSED CULTIVATION FACILITY

1480 MAIN STREET
MILLIS, MA

PROPOSED SITE LAYOUT PLAN

C-2

COPYRIGHT © 2021 STRONG POINT ENGINEERING SOLUTIONS, INC.

RETAINING WALL ELEVATION SCHEDULE

LOCATION	TOP GRADE	BOTTOM GRADE
A1	144.00	143.00
A2	144.50	139.50
A3	146.00	139.50
A4	146.00	142.00
A5	146.00	141.00
A6	140.70	140.70
B1	147.00	146.00
B2	147.00	142.00
B3	147.00	142.00
B4	148.50	146.00

STORMWATER PIPE SCHEDULE

FROM	TO	LENGTH	SLOPE	DIA (IN)
AD-100A	INFIL-100	9 FT	1.0%	12 IN
INFIL-100	DMH-101	60 FT	2.3%	12 IN
CB-101A	DMH-101	12 FT	0.5%	12 IN
DMH-101	HW-102	14 FT	0.7%	12 IN
FES-100	FES-101	18 FT	0.5%	18 IN

FROM	TO	LENGTH	SLOPE	DIA (IN)
INFIL-200	DMH-203	14 FT	1.0%	12 IN
CB-200A	DMH-203	8 FT	2.0%	12 IN
TR-200	DMH-201	80 FT	0.5%	8 IN
DCB-201A	DMH-201	290 FT	0.5%	18 IN
DCB-201B	DMH-201	67 FT	1.7%	18 IN
DMH-203	DMH-200	187 FT	0.5%	18 IN
DMH-201	DMH-200	5 FT	3.1%	18 IN
DMH-200	HW-200	12 FT	0.5%	18 IN
OCS-200	FES-200	12 FT	0.5%	24 IN

FROM	TO	LENGTH	SLOPE	DIA (IN)
CB-300A	DMH-300	18 FT	1.0%	12 IN
CB-300B	DMH-300	10 FT	2.0%	12 IN
DMH-300	INFIL-300	8 FT	3.0%	12 IN
INFIL-300	FES-300	100 FT	1.7%	12 IN

FROM	TO	LENGTH	SLOPE	DIA (IN)
CB-400A	INFIL-400	18 FT	2.0%	12 IN
INFIL-400	EX. DMH	53 FT	4.0%	12 IN

STORMWATER STRUCTURE SCHEDULE

100 SERIES

AD-100A
RIM=142.75
INV OUT=140.35 (INFIL-100)

INFIL-100
TOP OF STONE=142.46
TOP OF CHAMBER=141.96
BOTTOM OF CHAMBER=140.25
BOTTOM OF STONE=139.75
INV IN =141.30 (ALL)
INV OUT=141.30

CB-101A (STC-450i)
RIM=143.00
INV OUT=140.00 (DMH-101)

DMH-101
RIM=143.80
INV IN=139.90 (ALL)
INV OUT=139.80 (HW-102)

HW-102
INV=139.70

FES-100
INV=140.50

FES-101
INV=140.35

200 SERIES

INFIL-200
TOP OF STONE=145.53
TOP OF CHAMBER=145.03
BOTTOM OF CHAMBER=143.36
BOTTOM OF STONE=142.86
INV IN=144.96
INV OUT=144.53

CB-203A
RIM=147.30
INV OUT=143.70 (DMH-200)

DMH-203
RIM=147.40
INV IN=143.91 (INF-200)
INV IN=143.65 (CB-200A)
INV OUT=143.15 (DMH-200)

TR-201
RIM=146.00
INV=144.05

DCB-201A
RIM=147.70
INV OUT=144.10 (DMH-201)

DCB-201B
RIM=147.70
INV OUT=143.65 (DMH-201)

DMH-201
RIM=148.50
INV IN=142.65 (ALL)
INV OUT=142.55 (DMH-200)

DMH-200 (STC-900)
RIM=148.50
INV IN=142.50 (ALL)
INV OUT=142.25 (DMH-200)

HW-200
INV=142.00

OCS-200
(SEE DETAIL)

FES-200
INV=142.00

300 SERIES

CB-300A
RIM=149.70
INV OUT=146.20 (DMH-300)

CB-300B
RIM=149.70
INV OUT=146.20 (DMH-300)

DMH-300 (STC-450i)
RIM=150.00
INV IN=146.00 (ALL)
IINV OUT=145.75 (INFIL-300)

INFIL-300
TOP OF STONE=147.0
TOP OF CHAMBER=146.50
BOTTOM OF CHAMBER=144.83
BOTTOM OF STONE=144.33
INV IN=145.50
INV OUT=146.25

FES-300
INV=144.60

400 SERIES

CB-400A (STC-450i)
RIM=144.50
INV OUT=141.50 (INFIL-400)

INFIL-400
TOP OF STONE=142.62
TOP OF CHAMBER=142.12
BOTTOM OF CHAMBER=140.45
BOTTOM OF STONE=139.95
INV IN=141.15
INV OUT=141.65

EX. DMH
PR. INV=139.6 (INFIL-400)

EXISTING FEATURES

- PROPERTY BOUNDARY
- WETLAND BOUNDARY
- 50' BUFFER
- 100' BUFFER
- FLOOD PLAIN BOUNDARY
- ZONE II BOUNDARY
- CATCH BASIN
- DRAIN MANHOLE
- DRAIN LINE
- SEWER MANHOLE
- SEWER LINE
- HYDRANT
- WATER LINE
- UTILITY POLE
- GAS LINE
- INDEX CONTOUR
- INTERMEDIATE CONTOUR

PROPOSED FEATURES

- BUILDING
- CONCRETE PAD
- EDGE OF PAVEMENT
- CURB
- SIDEWALK
- RETAINING WALL
- INDEX COUNTOUR
- INTERMEDIATE CONTOUR
- CATCH BASIN
- DRAIN MANHOLE
- DRAIN LINE
- RIP RAP AREA
- SEWER LINE
- WATER LINE
- GAS LINE
- ELECTRIC LINE

NOTES

1. ALL CONSTRUCTION SHALL CONFORM TO THE APPLICABLE REQUIREMENTS OF THE TOWN OF MILLIS.

2. INSTALLATION OF ALL UTILITIES SHALL CONFORM TO THE STANDARDS AND SPECIFICATIONS OF THE TOWN OF MILLIS AND/OR UTILITY AGENCY RESPONSIBLE FOR THEIR INSTALLATION AND MAINTENANCE. WHERE DISCREPANCIES EXIST BETWEEN THE INFORMATION PRESENTED HERE AND THOSE REQUIREMENTS, THE MORE STRINGENT SHALL APPLY.

3. THE CONTRACTOR IS SPECIFICALLY CAUTIONED THAT THE LOCATIONS/AND OR ELEVATIONS OF EXISTING UTILITIES AND STRUCTURES SHOWN ON THESE PLANS ARE BASED ON THE RECORDS OF VARIOUS UTILITY COMPANIES AND WHERE POSSIBLE, MEASUREMENTS TAKEN IN THE FIELD. THIS INFORMATION IS NOT TO BE RELIED ON AS BEING EXACT NOR COMPLETE. THE LOCATIONS AND ELEVATIONS OF ALL UNDERGROUND UTILITIES AND STRUCTURES SHALL BE VERIFIED IN THE FIELD BY THE CONTRACTOR PRIOR TO THE START OF CONSTRUCTION.

4. ALL ELEVATIONS SHOWN HERE REFERENCE NGVD 29.

5. FINAL LOCATION OF PRIVATE UTILITIES SHALL BE COORDINATED WITH THE RESPONSIBLE UTILITY AGENCY.

6. THE CONTRACTOR SHALL COORDINATE WITH ALL UTILITY COMPANIES TO DETERMINE EXACT POINT OF SERVICE CONNECTION AT EXISTING UTILITY.

7. ELECTRIC, TELEPHONE, AND CABLE LAYOUT AND DESIGN ARE SUBJECT TO THE REQUIREMENTS OF THE APPLICABLE UTILITY COMPANY AND WILL BE PROVIDED BY THE CONTRACTOR PRIOR TO INSTALLATION.

8. WATER LINES SHALL BE INSTALLED NO CLOSER THAN 10 FEET (HORIZONTAL SEPARATION) TO ANY SANITARY SEWER OR STORM DRAIN LINE.

9. IF MUNICIPAL, PERMITTING AUTHORITY OR UTILITY COMPANY SPECIFICATIONS AND/OR REQUIREMENTS DIFFER FROM THE REQUIREMENTS OF THESE PLANS IN ANY REGARD, THE MORE STRINGENT REQUIREMENT SHALL APPLY.

10. ALL STORMWATER SYSTEM PIPE MATERIAL SHALL BE HDPE UNLESS OTHERWISE NOTED.

11. ROOF LEADERS SHALL BE MINIMUM 6" PVC WITH A MINIMUM OF 2 FT COVER AND SHALL BE EQUIPPED WITH ADEQUATE CLEANOUTS. FINAL MANIFOLD CONFIGURATION TO BE PROVIDED BY MEP CONSULTANT.

12. INFILTRATION FIELDS TO MEET ALL H20 LOADING REQUIREMENTS.

13. CONNECTION TO DMH IN MAIN STREET TO MEET ALL MILLIS DEPARTMENT OF PUBLIC WORKS STANDARDS AND SPECIFICATIONS.

14. DOUBLE CATCH BASIN FRAME & GRATES TO BE NEENAH FOUNDRY MODEL R-3455-C OR APPROVED EQUAL.

15. WHEN AN INFILTRATION SYSTEM IS LOCATED IN AREAS OF FILL, EXCAVATION SHALL BE ADVANCED TO NATURAL SOIL LAYER AND BE REPLACED WITH ACCEPTABLE NATIVE MATERIALS.

40 0 20 40 80 160
GRAPHICAL SCALE: 1" = 40'

ISSUED FOR REVIEW
NOT FOR CONSTRUCTION

COMMONWEALTH OF MASSACHUSETTS
ERIC D DIAS
CIVIL
No. 48158
REGISTERED PROFESSIONAL ENGINEER

PROFESSIONAL ENGINEER FOR
STRONG POINT ENGINEERING SOLUTIONS, INC

REV	DESCRIPTION	DATE
3	REVIEW COMMENTS	09/01/21
2	REVIEW COMMENTS	08/27/21
1	SITE PLAN REVIEW	07/21/21

STRONGPOINT
ENGINEERING SOLUTIONS, INC
340 MANLEY STREET, UNIT 2
WEST BRIDGEWATER, MA 02379
(508) 682-0229

PROJECT NUMBER:	2009-006
DATE OF ISSUE:	MAY 17, 2021
SCALE:	1"=40'
DRAFTED BY: SH/MH	CHECKED BY: ED

PREPARED ON BEHALF OF:
GTE MILLIS, LLC.
251 N. PEARL STREET
BROCKTON, MA 02301

SPECIAL PERMIT PLAN
FOR
PROPOSED
CULTIVATION FACILITY
1480 MAIN STREET
MILLIS, MA

PROPOSED GRADING & UTILITY PLAN

C-3

COPYRIGHT © 2021 STRONG POINT ENGINEERING SOLUTIONS, INC

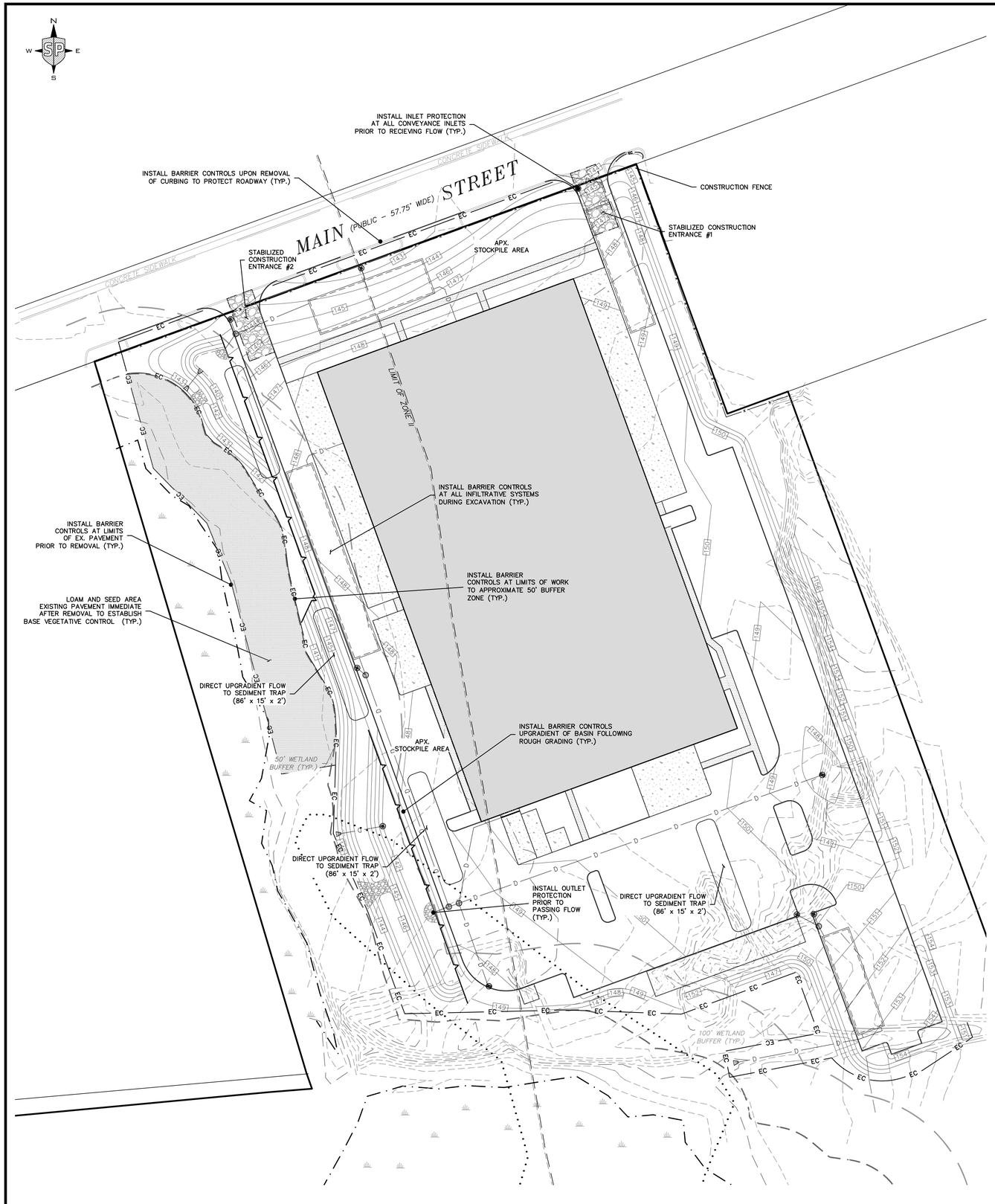

EXISTING FEATURES

- PROPERTY BOUNDARY
- WETLAND BOUNDARY
- 50' BUFFER
- 100' BUFFER
- FLOOD PLAIN BOUNDARY
- ZONE II BOUNDARY
- INDEX CONTOUR
- INTERMEDIATE CONTOUR

PROPOSED FEATURES

- BUILDING
- CONCRETE PAD
- EDGE OF PAVEMENT
- CURB
- SIDEWALK
- RETAINING WALL
- 100 INDEX COUNTOUR
- 101 INTERMEDIATE CONTOUR
- CATCH BASIN
- DRAIN MANHOLE
- D DRAIN LINE
- EC EROSION CONTROL BARRIER
- CONSTRUCTION ENTRANCE
- LOAM AND SEED BUFFER AREA
- x CONSTRUCTION FENCE

NOTES

1. EROSION CONTROLS DEPICTED ON THIS PLAN ARE INTENDED TO PROVIDE A REASONABLE GUIDE TO THE MINIMUM EROSION AND SEDIMENT CONTROL REQUIREMENTS FOR THE PROPOSED SITE WORK CONSTRUCTION. THE CONTROLS DEPICTED ARE MINIMUM REQUIREMENTS TO BE EMPLOYED IN A GENERAL SENSE. ADDITIONAL CONTROLS SHALL BE IMPLEMENTED AS DEEMED NECESSARY BY THE APPLICANT, STORMWATER CONSULTANT, AND/OR TOWN OF MILLIS REPRESENTATIVE.
2. LOCATIONS OF CONTROLS ARE APPROXIMATE AND SUBJECT TO CHANGE BASED ON FIELD CONDITIONS AND SITE WORK REQUIREMENTS.
3. ALL EROSION AND SEDIMENTATION CONTROL MEASURES SHALL BE CONSTRUCTED IN ACCORDANCE WITH MASSACHUSETTS (DEP) EROSION AND SEDIMENTATION CONTROL GUIDELINES, AUGUST 1983, THE U.S.D.A. S.C.S. EROSION AND SEDIMENT CONTROL IN SITE DEVELOPMENT, MASSACHUSETTS CONSERVATION GUIDE, SEPTEMBER 1983 AND ALL LOCAL MUNICIPAL REGULATIONS. CONTRACTOR IS RESPONSIBLE FOR OBTAINING THESE DOCUMENTS.
4. CONTRACTOR SHALL MAKE EVERY REASONABLE EFFORT TO ENSURE THAT NO SEDIMENT OR UNCLEAN STORMWATER RUNOFF OR OTHER DISCHARGE IS DIRECTED TO ANY STORMWATER CONVEYANCE, ADJACENT PROPERTY OR WETLAND RESOURCE AREAS. THESE AREAS SHALL BE CONSIDERED CRITICAL AND SHALL BE PROTECTED TO THE MAXIMUM EXTENT PRACTICABLE. ANY SEDIMENT DISCHARGED TO THESE AREAS SHALL BE REMOVED WITHIN 24 HOURS IN ITS ENTIRETY BY APPROPRIATE MEANS.
5. THE LIMIT OF WORK SHALL BE CONSISTENT WITH THE MINIMUM AREA REQUIRED TO BE DISTURBED TO PERFORM THE PROPOSED WORK AS GENERALLY INDICATED BY THE PERIMETER EROSION CONTROL BARRIER DEPICTED.
6. ALL EXCAVATIONS SHOULD BE PERFORMED AND BACKFILLED APPROPRIATELY IN AS EXPEDITIOUSLY A MANNER AS POSSIBLE. IT IS THE RESPONSIBILITY OF THE SITEWORK CONTRACTOR TO ANTICIPATE INCLEMENT WEATHER CONDITIONS AND ANY OTHER FACTORS THAT MAY INFLUENCE EROSION AND SEDIMENTATION CONTROL RELATIVE TO THIS WORK AND TO RESPOND ACCORDINGLY.
7. THE CONTRACTOR SHALL MAKE EVERY EFFORT TO KEEP VEHICULAR TRAVELED WAYS CLEAN AND SHALL SWEEP AND REMOVE ALL DEBRIS DAILY AT A MINIMUM. ANY LARGE STONES (2" DIA OR GREATER) OR DEBRIS SHALL BE REMOVED FROM THE ROADWAY IMMEDIATELY.
8. CONTRACTOR SHALL ESTABLISH CONVENIENT STOCKPILE AND STAGING AREAS WITHIN THE DESIGNATED WORK AREA ONLY. CONTRACTOR SHALL MAKE EVERY EFFORT TO COMBINE THESE AREAS AND MITIGATE THE NEED FOR RELOCATION TO DURING THE CONSTRUCTION PERIOD TO THE MAXIMUM EXTENT PRACTICABLE.
9. ALL SOIL STOCKPILES SHALL BE STABILIZED WITH PERIMETER EROSION CONTROLS ALONG THE DOWN GRADIENT SIDE IN ACCORD WITH THE DETAIL PROVIDED.
10. SEDIMENT TRAPS ARE TO BE LINED WITH 1–3" WASHED STONE AND EMPLOYED AS NEEDED. CONTRACTOR TO DIRECT RUNOFF TOWARDS BASIN WITH TEMPORARY GRADING OR EROSION CONTROL MEASURES. RUNOFF FROM NO MORE THAN ONE ACRE IS TO BE DIRECTED TO EACH BASIN AS SHOWN. BASINS MAY BE EMPLOYED AND MOVED AS NECESSARY. ALTERNATIVELY, BASINS SHALL BE SIZED TO HOLD AT MINIMUM 3,600 CF PER ACRE OF RUNOFF DIRECTED TOWARD THEM. ENGINEER OF RECORD SHALL APPROVE FINAL SIZE AND LOCATION OF SEDIMENT TRAPS ON A CASE BY CASE BASIS.
11. REFER TO PROJECT STORMWATER POLLUTION PREVENTION PLAN FOR ADDITIONAL EROSION AND SEDIMENTATION CONTROL REQUIREMENTS.
12. ANY OVERNIGHT VEHICLE STORAGE SHALL BE ON THE EASTERN SIDE OF THE SITE AND OUTSIDE OF THE 100 WETLAND BUFFER.

CONSTRUCTION SCHEDULE:

CONSTRUCTION WORK HOURS: MONDAY–FRIDAY, 7 AM TO 5 PM
SATURDAY, 8 AM TO 4 PM

MINIMUM CONSTRUCTION REQUIREMENTS & SEQUENCING:

THE FOLLOWING MINIMUM CONSTRUCTION REQUIREMENTS & SEQUENCING SHALL BE ADHERED TO DURING PERFORMANCE OF ALL WORK PERFORMED. ANY NECESSARY REVISIONS TO THE PROPOSED SEQUENCING SHALL BE APPROVED BY THE ENGINEER OF RECORD IN KEEPING WITH THE INTENT PRESENTED HERE PRIOR TO IMPLEMENTATION.

1. INSTALL INLET FILTER PROTECTION IN EXISTING CATCH BASINS IN MAIN STREET PRIOR TO ANY EARTH DISTURBANCE.
2. STAKE THE PROPOSED LOCATION OF THE EROSION CONTROL BARRIERS/PROPERTY LINE.
3. INSTALL CONSTRUCTION FENCE SPECIFIED AREA.
4. CLEAR THE MINIMUM VEGETATION NECESSARY TO INSTALL THE EROSION CONTROL BARRIERS. EROSION CONTROL BARRIER INSTALLATION SHALL BE INSPECTED BY THE ENGINEER OF RECORD PRIOR TO COMMENCEMENT OF SITE CLEARING.
5. CLEAR AND GRUB/REMOVE HARDSCAPE MATERIALS.
6. INSTALL STABILIZED CONSTRUCTION ENTRANCE.
7. ESTABLISH TEMPORARY STOCKPILE AREAS AS NEEDED EMPLOYING PROPER PERIMETER CONTROLS.
8. PROCEED WITH ROUGH SITE GRADING.
9. INSTALL UTILITIES AND STRUCTURES AS APPROPRIATE. CONSULT ENGINEER OF RECORD FOR DEWATERING REQUIREMENTS AS NEEDED.
10. INSTALL INLET FILTRATION ON ALL PROPOSED STORMWATER CONVEYANCES AS SOON AS THEY MAY RECEIVE RUNOFF.
11. PERFORM FINAL GRADING AND INSTALL HARDSCAPE FEATURES
12. INSTALL LANDSCAPING/LOAM AND SEED ALL DISTURBED AREAS.
13. REMOVE EROSION CONTROL BARRIERS ONLY WHEN SITE IS STABILIZED AS DETERMINED BY THE ENGINEER OF RECORD.

COMMONWEALTH OF MASSACHUSETTS
ERIC D DIAS
CIVIL
No. 48158
REGISTERED PROFESSIONAL ENGINEER

PROFESSIONAL ENGINEER FOR
STRONG POINT ENGINEERING SOLUTIONS, INC

REV	DESCRIPTION	DATE
3	REVIEW COMMENTS	09/01/21
2	REVIEW COMMENTS	08/27/21
1	SITE PLAN REVIEW	07/21/21

STRONGPOINT
ENGINEERING SOLUTIONS, INC
340 MANLEY STREET, UNIT 2
WEST BRIDGEWATER, MA 02379
(508) 682-0229

PROJECT NUMBER:	2009–006		
DATE OF ISSUE:	MAY 17, 2021		
SCALE:	1"=40'		
DRAFTED BY:	SH/MH	CHECKED BY:	ED

PREPARED ON BEHALF OF:
GTE MILLIS, LLC.
251 N. PEARL STREET
BROCKTON, MA 02301

SPECIAL PERMIT PLAN
FOR
PROPOSED
CULTIVATION FACILITY
1480 MAIN STREET
MILLIS, MA

PROPOSED EROSION CONTROL PLAN

C-4

40 0 20 40 80 160
GRAPHICAL SCALE: 1" = 40'

ISSUED FOR REVIEW
NOT FOR CONSTRUCTION

COPYRIGHT © 2021 STRONG POINT ENGINEERING SOLUTIONS, INC

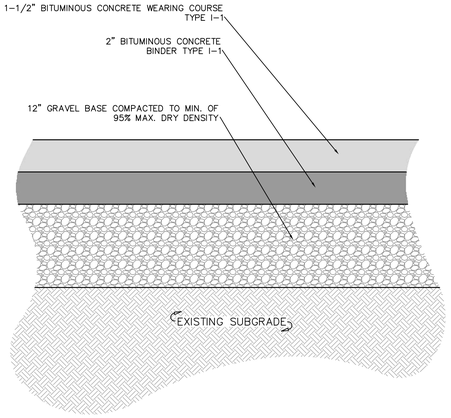

TYPICAL STANDARD PAVEMENT SECTION
NOT TO SCALE

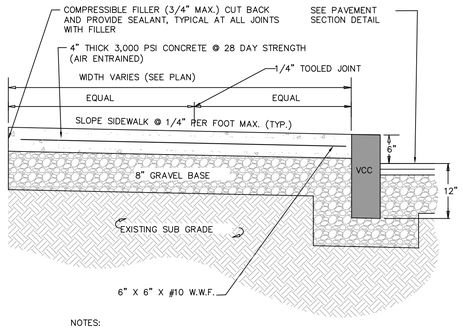

NOTES:
1. SIDEWALK TO HAVE TOOLED JOINTS IN A 5' x 5' (TYP.) GRID WITH EXPANSION JOINTS 15' ON CENTER AND PRE MOLDED FILLER.
2. TOOLED JOINT 6" FROM FACE OF CURB
3. SEE PLAN FOR ELEVATIONS AT CURB

CONCRETE SIDEWALK DETAIL
NOT TO SCALE

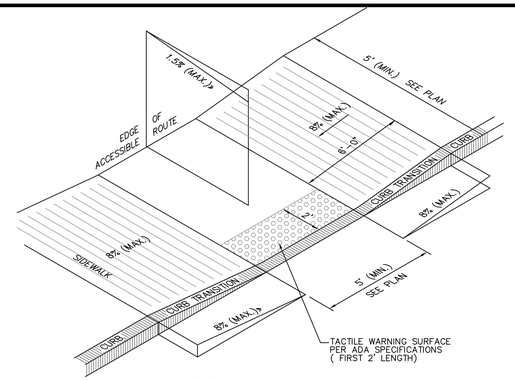

NOTES:
1. THE MAXIMUM ALLOWABLE ROUTE (SIDEWALK) AND CURB RAMP CROSS SLOPES SHALL BE 1.5%
2. THE MAXIMUM ALLOWABLE SLOPE OF ACCESSIBLE ROUTE EXCLUDING CURB RAMPS SHALL BE 5%
3. THE MAXIMUM ALLOWABLE SLOPE OF ACCESSIBLE ROUTE CURB RAMPS SHALL BE 8%
4. A MINIMUM OF 4 FEET CLEAR SHALL BE MAINTAINED AT ANY PERMANENT OBSTACLE IN ACCESSIBLE ROUTE (I.E., HYDRANTS, UTILITY POLES, TREE WELLS, SIGNS, ETC.)
5. CURB TREATMENT VARIES, SEE PLANS FOR CURB TYPE.
6. BASE OF RAMP SHALL BE GRADED TO PREVENT PONDING.
7. SEE TYPICAL SIDEWALK SECTION FOR RAMP CONSTRUCTION.

ACCESSIBLE CURB RAMP – TYPE D
NOT TO SCALE

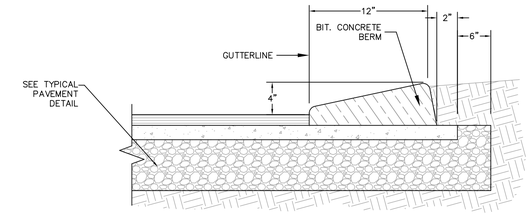

CAPE COD BERM DETAIL
NOT TO SCALE

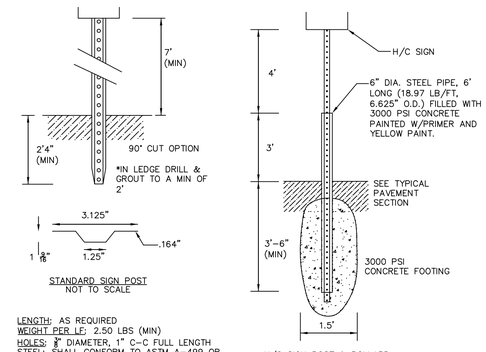

LENGTH: AS REQUIRED
WEIGHT PER LF: 2.50 LBS (MIN)
HOLES: 3/8" DIAMETER, 1" C-C FULL LENGTH
STEEL: SHALL CONFORM TO ASTM A-499 OR ASTM A-576
FINISH: SHALL BE PAINTED WITH 2 COATS OF AN APPROVED MEDIUM GREEN, BAKED ON OR AIR DRIED, PAINT OF WEATHER RESISTANT QUALITY.

NOTE:
1. STEEL PIPE BOLLARD & CONCRETE FOOTING TO BE USED ON POST MOUNTED SIGNS IN PAVED AREAS. SEE DETAIL #10 HEREON.

SIGN POST DETAILS
NOT TO SCALE

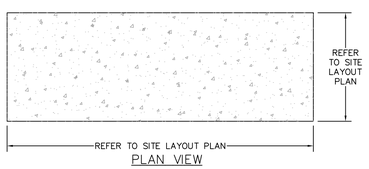

PLAN VIEW

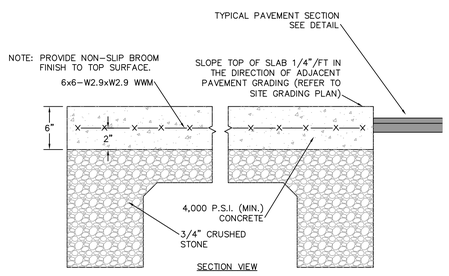

TRANSFORMER AND DUMPSTER PAD DETAIL
NOT TO SCALE

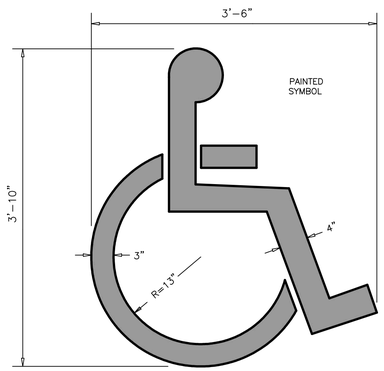

TYPICAL PAINTED HANDICAP SYMBOL DETAIL
NOT TO SCALE

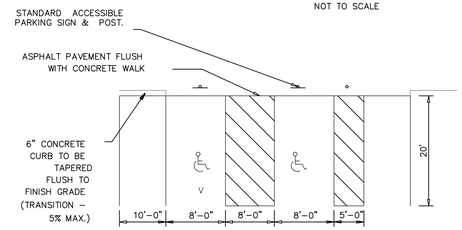

NOTES:
1. ADA STALL STRIPING TO COMPLY WITH COMMOMWEALTH OF MASSACHUSETTS DOT STANDARDS
2. "V" DENOTES HANDICAPPED ACCESIBLE PARKING SPACE.
3. STALLS SHOWN ARE TYPICAL. REFER TO SITE PLAN FOR ACTUAL LAYOUT.

ACCESSIBLE PARKING–SIZE AND MARKINGS DETAIL
NOT TO SCALE

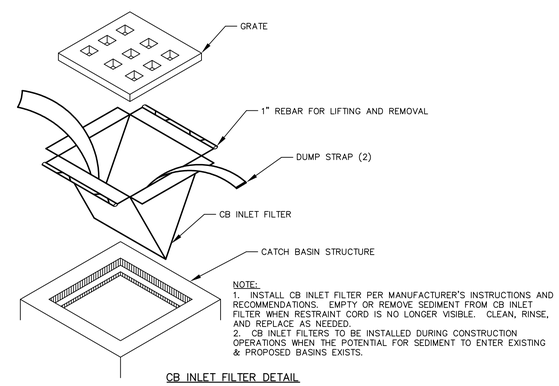

NOTE:
1. INSTALL CB INLET FILTER PER MANUFACTURER'S INSTRUCTIONS AND RECOMMENDATIONS. EMPTY OR REMOVE SEDIMENT FROM CB INLET FILTER WHEN RESTRAINT CORD IS NO LONGER VISIBLE. CLEAN, RINSE, AND REPLACE AS NEEDED.
2. CB INLET FILTERS TO BE INSTALLED DURING CONSTRUCTION OPERATIONS WHEN THE POTENTIAL FOR SEDIMENT TO ENTER EXISTING & PROPOSED BASINS EXISTS.

CB INLET FILTER DETAIL
NOT TO SCALE

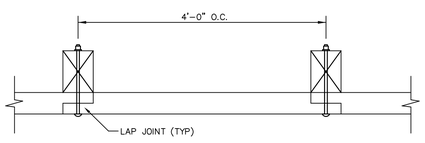

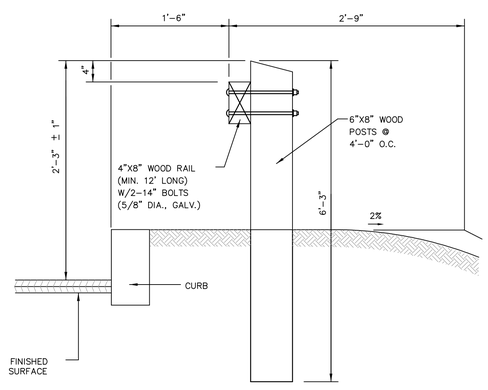

WOODEN GUARDRAIL
NOT TO SCALE

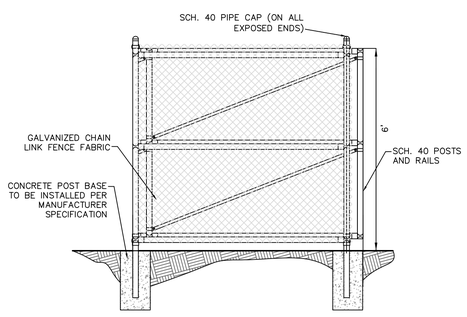

TYPICAL 6' CHAINLINK FENCE DETAIL
NOT TO SCALE

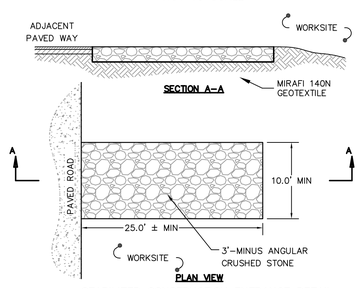

STABILIZED CONSTRUCTION ENTRANCE DETAIL
NOT TO SCALE

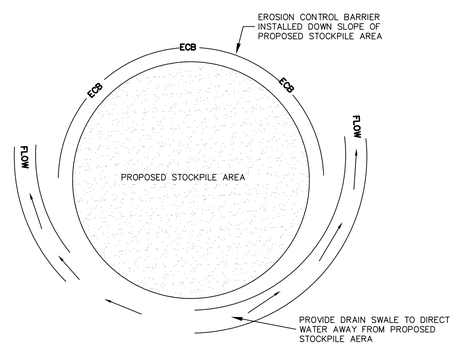

NOTES:
1. SOIL AND FILL STOCKPILES EXPECTED TO REMAIN IN PLACE FOR LESS THAN 90 DAYS SHALL BE COVERED WITH HAY AND MULCH (AT 100LBS/1,000 SF), OR WITH AN ANCHORED TARP WITHIN 7 DAYS OR PRIOR TO ANY RAINFALL.
2. SOIL AND FILL STOCKPILES EXPECTED TO REMAIN IN PLACE FOR 90 DAYS OR MORE SHALL BE SEEDED WITH WINTER RYE (FOR FALL SEEDING AT 1LB/1,000 SF) OR OATS (FOR SUMMER SEEDING AT 2LB/1,000 SF) AND THEN COVERED WITH HAY MULCH (AT 100LB/1,000 SF) OR AN ANCHORED TARP WITHIN 7 DAYS OR PRIOR TO ANY RAINFALL.

STOCKPILE PROTECTION DETAIL
NOT TO SCALE

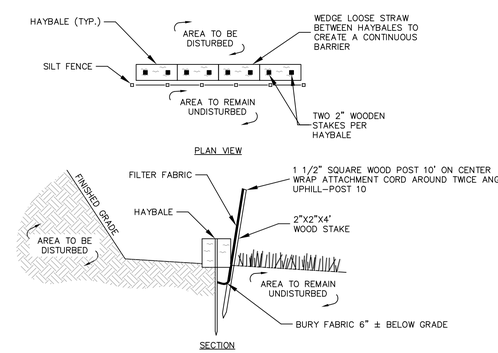

NOTE: HAYBALES TO BE USED ONLY ALONG EROSION CONTROL BARRIER WITHIN THE 100' BUFFER TO BUFFERING VEGETATED WETLAND.

SILT FENCE AND HAYBALE DETAIL
NOT TO SCALE

COMMONWEALTH OF MASSACHUSETTS
ERIC D DIAS
CIVIL
No. 45158
REGISTERED PROFESSIONAL ENGINEER

PROFESSIONAL ENGINEER FOR
STRONG POINT ENGINEERING SOLUTIONS, INC

REV	DESCRIPTION	DATE
2	REVIEW COMMENTS	8/27/21
1	SITE PLAN REVIEW	07/21/21

STRONGPOINT
ENGINEERING SOLUTIONS, INC
340 MANLEY STREET, UNIT 2
WEST BRIDGEWATER, MA 02379
(508) 682-0229

PROJECT NUMBER: 2009-006
DATE OF ISSUE: MAY 17, 2021
SCALE: 1"=40'
DRAFTED BY: SH/MH CHECKED BY: ED

PREPARED ON BEHALF OF:
GTE MILLIS, LLC.
251 N. PEARL STREET
BROCKTON, MA 02301

SPECIAL PERMIT PLAN
FOR
PROPOSED
CULTIVATION FACILITY
1480 MAIN STREET
MILLIS, MA

DETAILS D-1

COPYRIGHT © 2021 STRONG POINT ENGINEERING SOLUTIONS, INC

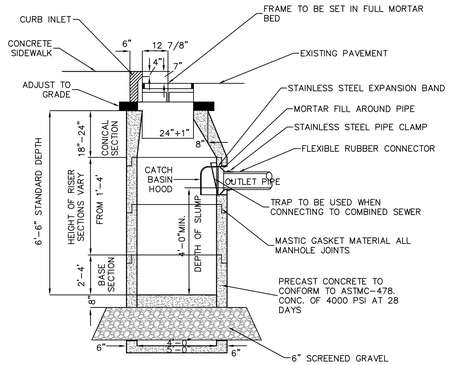

NOTE: DOUBLE CATCH BASIN GRATE TO BE NEENAH FOUNDRY MODEL R-3455-C OR APPROVED EQUAL.

PRECAST CONCRETE CATCH BASIN

NOT TO SCALE

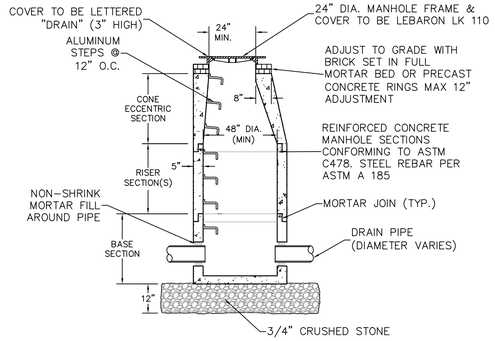

NOTE:
THE MANHOLE, INCLUDING ALL COMPONENT PARTS, SHALL HAVE ADEQUATE SPACE AND STRENGTH QUALITIES CONSIDERED NECESSARY FOR THE INTENDED SERVICE. SPACE REQUIREMENT AND CONFIGURATIONS SHALL BE AS SHOWN ON THE DRAWING. THE COMPLETE STRUCTURE SHALL BE OF SUCH MATERIAL AND QUALITY AS TO WITHSTAND (H-20 LOADING) WITHOUT FAILURE.

PRECAST CONCRETE DRAIN MANHOLE

NOT TO SCALE

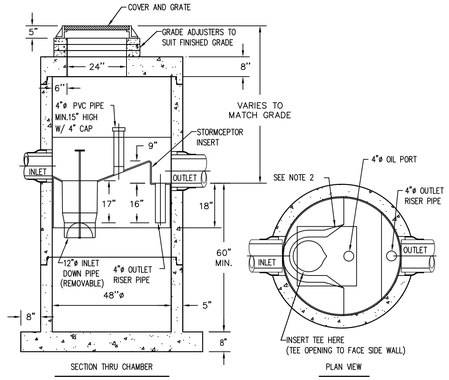

NOTES:

1. THE USE OF FLEXIBLE CONNECTION IS RECOMMENDED AT THE INLET AND OUTLET WHERE APPLICABLE.

2. THE COVER SHOULD BE POSITIONED OVER THE OUTLET DROP PIPE AND THE OIL PORT.

STORMCEPTER STC-450i AND WATER QUALITY UNIT

NOT TO SCALE

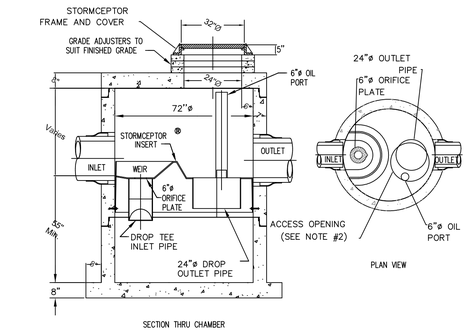

NOTES:

1. THE USE OF FLEXIBLE CONNECTION IS RECOMMENDED AT THE INLET AND OUTLET WHERE APPLICABLE.

2. THE COVER SHOULD BE POSITIONED OVER THE OUTLET DROP PIPE AND THE OIL PORT.

STORMCEPTER STC-900 WATER QUALITY UNIT

NOT TO SCALE

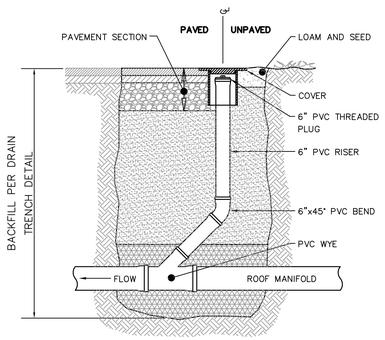

NOTES:
1. CLEANOUT COVER SHALL BE PVC IF LOCATED IN LAWN OR LANDSCAPED AREA.
2. COVER SHALL BE CAST IRON IS LOCATED IN SIDEWALK, PARKING LOT OR DRIVEWAY. CAST IRON COVER SHALL BE RATED BY THE MANUFACTURER TO WITHSTAND H-20 LOADING CONDITIONS.

ROOF DRAIN MANIFOLD CLEANOUT

NOT TO SCALE

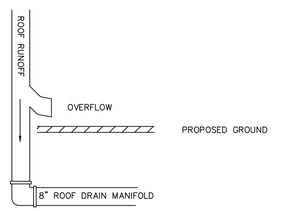

ROOFTOP DRAINAGE CONNECTION DETAIL

NOT TO SCALE

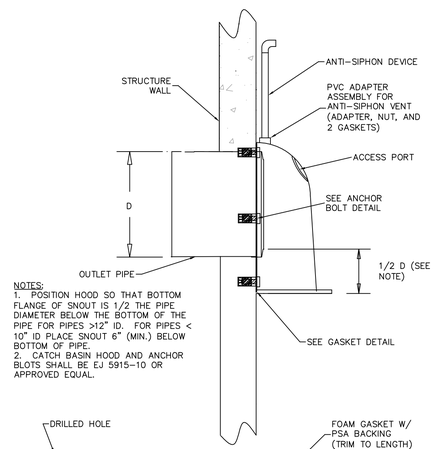

NOTES:
1. POSITION HOOD SO THAT BOTTOM FLANGE OF SNOUT IS 1/2 THE PIPE DIAMETER BELOW THE BOTTOM OF THE PIPE FOR PIPES >12" ID. FOR PIPES < 10" ID PLACE SNOUT 6" (MIN.) BELOW BOTTOM OF PIPE.
2. CATCH BASIN HOOD AND ANCHOR BLOTS SHALL BE EJ 5915-10 OR APPROVED EQUAL.

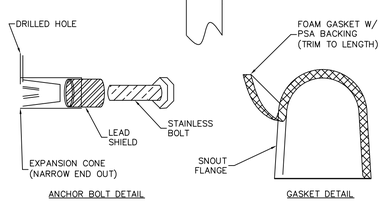

CATCH BASIN HOOD

NOT TO SCALE

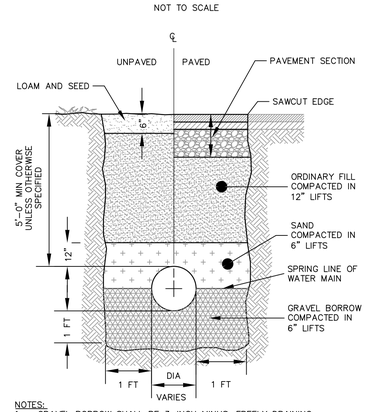

NOTES:
1. GRAVEL BORROW SHALL BE 3-INCH MINUS, FREELY DRAINING, WELL-GRADED GRAVEL OR AS OTHERWISE DEFINED IN THE TECHNICAL SPECIFICATIONS.
2. ORDINARY FILL SHALL 6-INCH MINUS GRAVEL OR AS OTHERWISE DEFINED IN THE TECHNICAL SPECIFICATIONS.
3. ALL BACKFILL MATERIALS SHALL BE FREE OF STICKS, ROOTS, CLAY, AND SILT.

WATER TRENCH

NOT TO SCALE

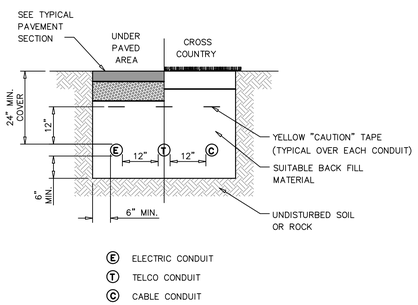

NOTES:

1. SCHEDULE 80 PVC CONDUIT REQUIRED UNDER ROAD AND DRIVEWAY SURFACES.

2. ALL UTILITY INSTALLATION REQUIREMENTS, SEPARATIONS, AND CONDUIT SIZES TO BE VERIFIED WITH EACH UTILITY COMPANY PRIOR TO INSTALLATION OF ANY UNDERGROUND UTILITY CONDUIT.

3. SEE SITE ELECTRICAL PLAN FOR SPECIFIC DETAILS

BURIED CONDUIT DETAIL

NOT TO SCALE

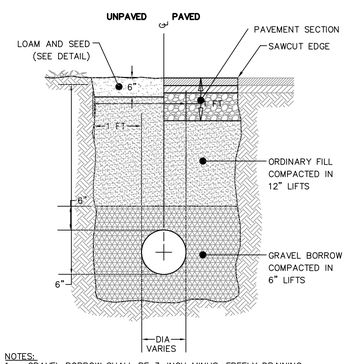

NOTES:
1. GRAVEL BORROW SHALL BE 3-INCH MINUS, FREELY DRAINING, WELL-GRADED GRAVEL OR AS OTHERWISE DEFINED IN THE TECHNICAL SPECIFICATIONS.
2. ORDINARY FILL SHALL 6-INCH MINUS GRAVEL OR AS OTHERWISE DEFINED IN THE TECHNICAL SPECIFICATIONS.
3. ALL BACKFILL MATERIALS SHALL BE FREE OF STICKS, ROOTS, CLAY, AND SILT.

DRAIN TRENCH

NOT TO SCALE

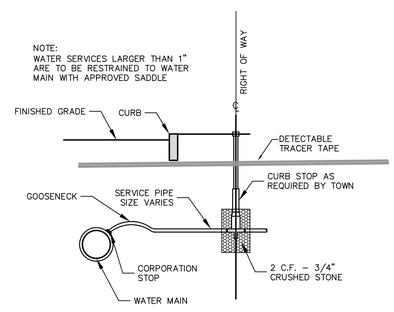

NOTE:
ALL TRENCHES AND PIPE INSTALLATIONS SHALL MEET THE FRANKLIN DPW SPECIFICATIONS

WATER SERVICE CONNECTION

NOT TO SCALE

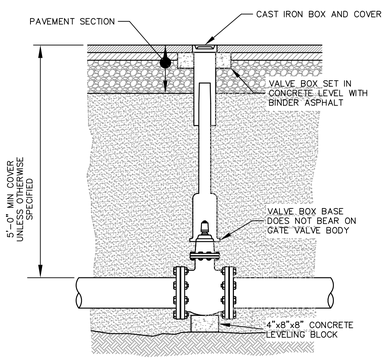

NOTES:
1. VALVE BOX COVER SHALL HAVE THE WORD "WATER" CAST IN 1" LETTERS.
2. VALVE BOX AND COVER SHALL BE RATED BY THE MANUFACTURER FOR H-20 LOADING CONDITIONS.
3. VALVE MANUFACTURER, MODEL AND OPENING DIRECTION AS PER MUNICIPAL REQUIREMENTS.

GATE VALVE

NOT TO SCALE

PROFESSIONAL ENGINEER FOR
STRONG POINT ENGINEERING SOLUTIONS, INC

REV	DESCRIPTION	DATE
2	REVIEW COMMENTS	8/27/21
1	SITE PLAN REVIEW	07/21/21

STRONGPOINT ENGINEERING SOLUTIONS, INC
340 MANLEY STREET, UNIT 2
WEST BRIDGEWATER, MA 02379
(508) 682-0229

PROJECT NUMBER:	2009-006
DATE OF ISSUE:	MAY 17, 2021
SCALE:	AS NOTED
DRAFTED BY: SH/MH	CHECKED BY: ED

PREPARED ON BEHALF OF:

GTE MILLIS, LLC.
251 N. PEARL STREET
BROCKTON, MA 02301

SPECIAL PERMIT PLAN
FOR
PROPOSED
CULTIVATION FACILITY
1480 MAIN STREET
MILLIS, MA

DETAILS

D-2

COPYRIGHT © 2021 STRONG POINT ENGINEERING SOLUTIONS, INC

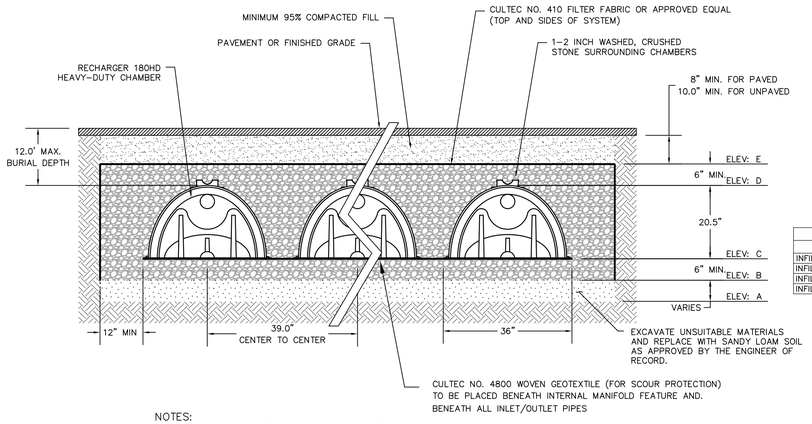

NOTES:
1. ALL UNSUITABLE MATERIALS SHALL BE REMOVED FROM BASE OF INFILTRATION SYSTEMS BED. ENGINEER OF RECORD AND AGENT OF THE TOWN OF MILLIS TO WITNESS EXCAVATION BEFORE INSTALLATION.
2. ALL CHAMBERS TO BE H20 LOADING CAPABLE.

CULTEC 180XLHD CROSS SECTION VIEW

NOT TO SCALE

ELEVATION TABLE

	A	B	C	D	E
INFIL 100	135.60	139.75	140.25	141.96	142.46
INFIL 200	137.00	142.86	143.36	145.07	145.57
INFIL 300	142.33	144.33	144.83	146.54	147.04
INFIL 400	135.60	139.95	140.45	142.16	142.66

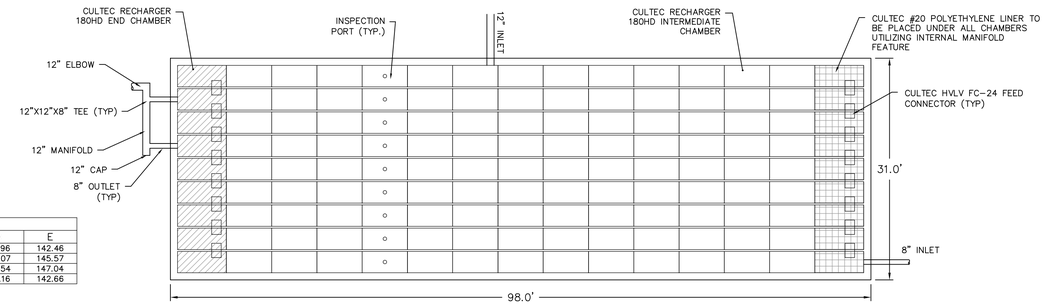

INFILTRATION FIELD 100

NOT TO SCALE

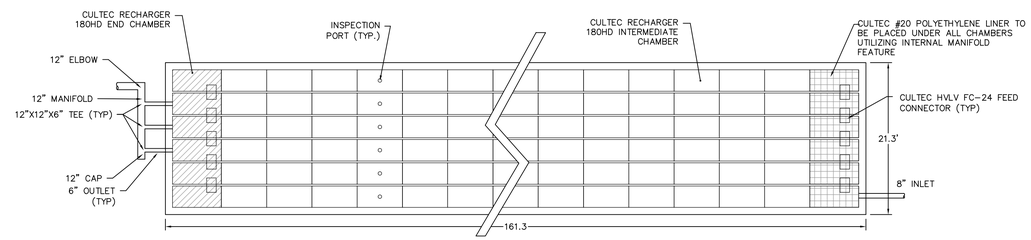

INFILTRATION FIELD 200

NOT TO SCALE

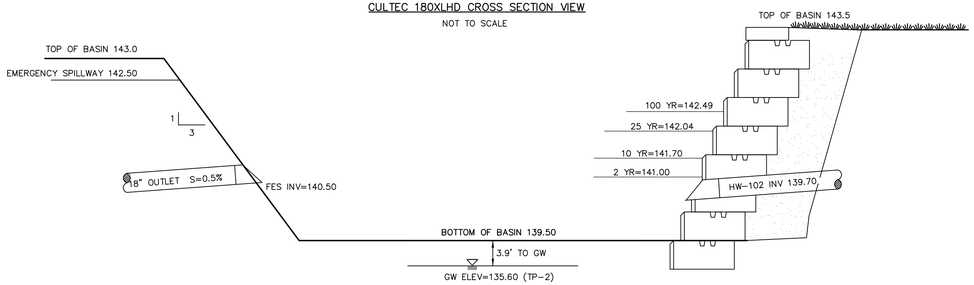

INFILTRATION BASIN #1

NOT TO SCALE

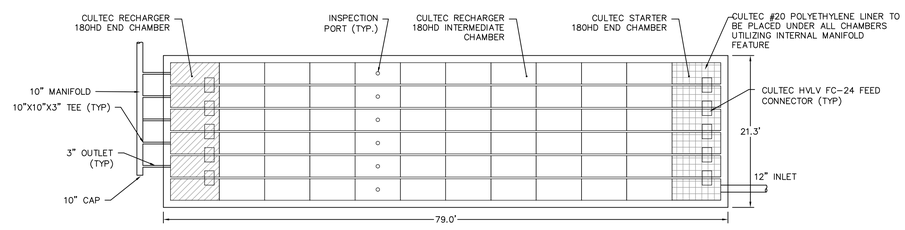

INFILTRATION FIELD 300

NOT TO SCALE

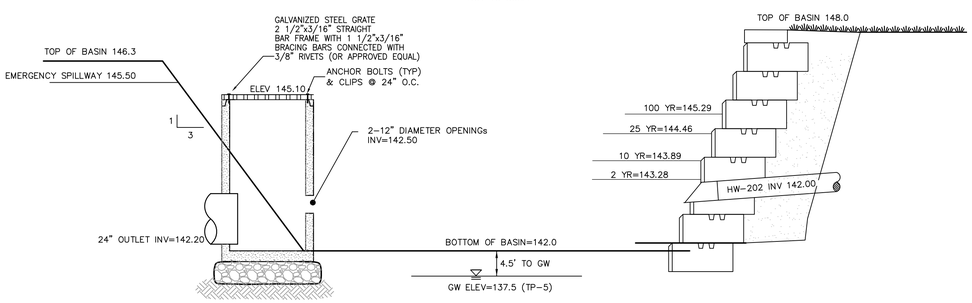

INFILTRATION BASIN #2 AND OUTLET CONTROL STRUCTURE

NOT TO SCALE

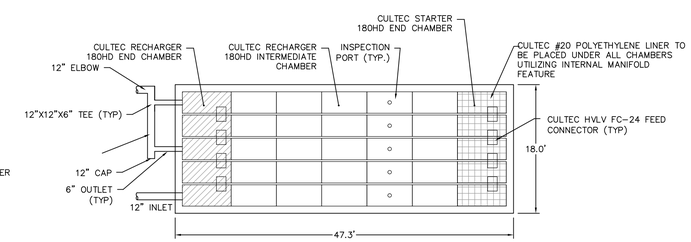

INFILTRATION FIELD 400

NOT TO SCALE

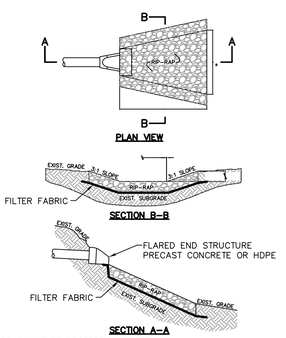

RIPRAP OUTLET PROTECTION NOTES:
1. STONE SIZE: D_{50}=12", 50 LB.
2. STONE SIZE SHALL BE EVENLY GRADED BETWEEN 3" AND 18".
3. FILTER FABRIC SHALL BE MIRAFI 140N OR APPROVED EQUAL.

RIP RAP OUTLET PROTECTION

NOT TO SCALE

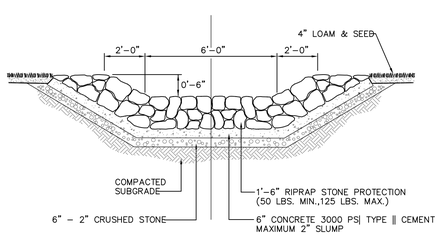

NOTES:
1. HAND SET FIRST LAYER OF RIPRAP INTO CONCRETE.
2. HAND PLACE REMAINING RIPRAP AFTER CONCRETE HAS SET AND CHINC WITH SMALLER STONES.

SPILLWAY

NOT TO SCALE

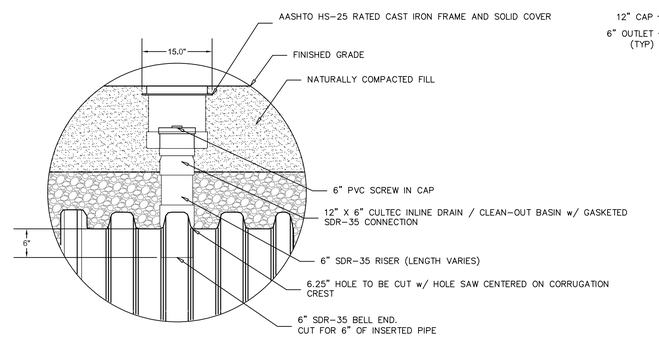

SUBSURFACE INFILTRATION INSPECTION PORT

NOT TO SCALE

COMMONWEALTH OF MASSACHUSETTS
ERIC D. DIAS
CIVIL
No. 48158
REGISTERED PROFESSIONAL ENGINEER

PROFESSIONAL ENGINEER FOR
STRONG POINT ENGINEERING SOLUTIONS, INC

REV	DESCRIPTION	DATE
3	REVIEW COMMENTS	09/01/21
2	REVIEW COMMENTS	8/27/21
1	SITE PLAN REVIEW	07/21/21

STRONGPOINT
ENGINEERING SOLUTIONS, INC
340 MANLEY STREET, UNIT 2
WEST BRIDGEWATER, MA 02379
(508) 682-0329

PROJECT NUMBER: 2009-006
DATE OF ISSUE: MAY 17, 2021
SCALE: AS NOTED
DRAFTED BY: SH/MH CHECKED BY: ED

PREPARED ON BEHALF OF:
GTE MILLIS, LLC.
251 N. PEARL STREET
BROCKTON, MA 02301

SPECIAL PERMIT PLAN
FOR
PROPOSED
CULTIVATION FACILITY
1480 MAIN STREET
MILLIS, MA

DETAILS

D-3

COPYRIGHT © 2021 STRONG POINT ENGINEERING SOLUTIONS, INC

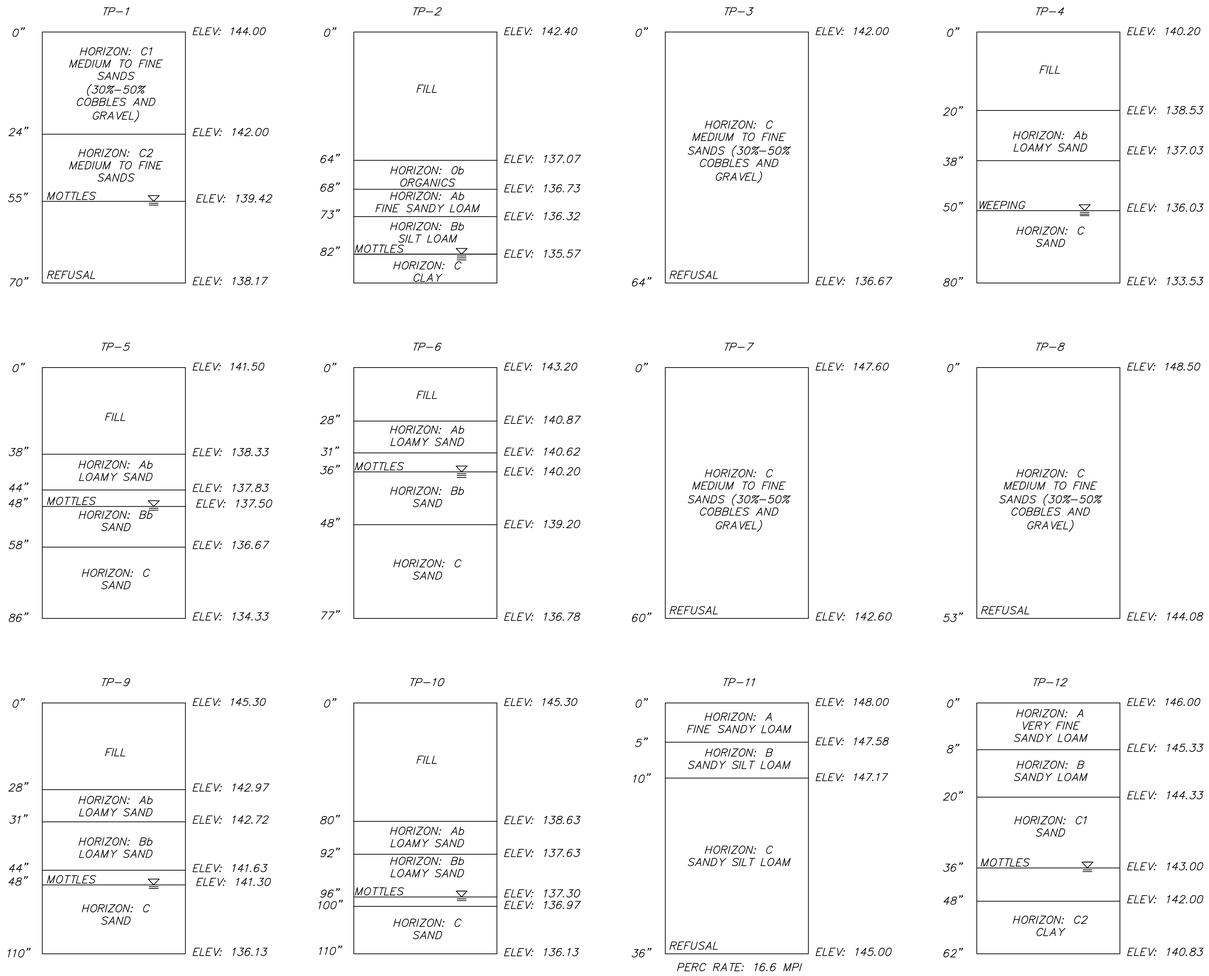

SOIL EVALUATION CONDUCTED ON 10/03/07 BY PETER POMMERSHEIM SE3046

TEST PIT DATA

NOT TO SCALE

COMMONWEALTH OF MASSACHUSETTS
ERIC D DIAS
CIVIL
No. 48158
REGISTERED PROFESSIONAL ENGINEER

PROFESSIONAL ENGINEER FOR
STRONG POINT ENGINEERING SOLUTIONS, INC

REV	DESCRIPTION	DATE
2	REVIEW COMMENTS	8/27/21
1	SITE PLAN REVIEW	07/21/21

STRONGPOINT
ENGINEERING SOLUTIONS, INC
340 MANLEY STREET, UNIT 2
WEST BRIDGEWATER, MA 02379
(508) 682-0229

PROJECT NUMBER: 2009-006

DATE OF ISSUE: MAY 17, 2021

SCALE: 1"=40'

DRAFTED BY: SH/MH CHECKED BY: ED

PREPARED ON BEHALF OF:

GTE MILLIS, LLC.
251 N. PEARL STREET
BROCKTON, MA 02301

SPECIAL PERMIT PLAN
FOR
PROPOSED
CULTIVATION FACILITY
1480 MAIN STREET
MILLIS, MA

DETAILS

D-4

COPYRIGHT © 2021 STRONG POINT ENGINEERING SOLUTIONS, INC

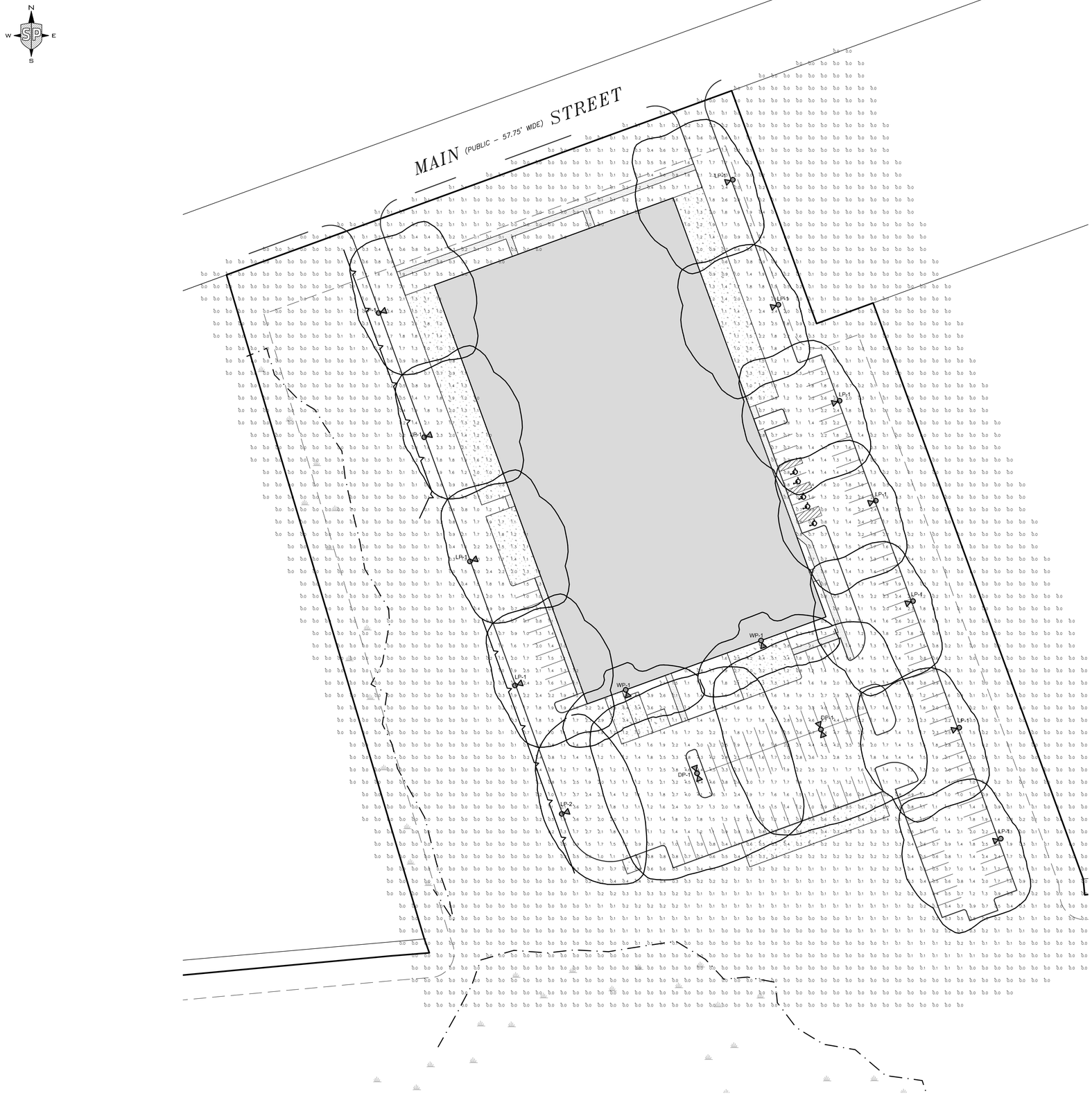

Outdoor Luminaire Schedule								
Symbol	Qty	Label	Description	Arrangement	Arm	Mount Height	Lum. Lumens	LLF
LP-1	11	OSQ4bls	OSQM-B-16L-40K7-4M-U-BLSMF CONF	SINGLE	1.5	25'	12349	0.900
LP-2	1	OSQ3bls	OSQM-B-16L-40K7-3M-U-BLSMF CONF	SINGLE	1.5	25'	12699	0.900
DP-1	2	OSQ25	OSQM-B-16L-40K7-5Q-U CONF	BACK-BACK	1.5	25'	16125	0.900
WP-1	2	XS2	XSPW-B-xx-2ME-8L-40K-UL	SINGLE	0	15'	8622	0.900

Calculation Summary							
Label	CalcType	Units	Avg	Max	Min	Avg/Min	Max/Min
CalcPts_1	Illuminance	Fc	0.54	6.8	0.0	N.A.	N.A.

Lighting Design by:

OMNI-LITE, INC.

263 WINN STREET BURLINGTON, MA. 01803
PH # 781-272-2300, FAX # 781-272-0759 www.omnilight.com

COMMONWEALTH OF MASSACHUSETTS
ERIC D DIAS
CIVIL
No. 48158
REGISTERED PROFESSIONAL ENGINEER

PROFESSIONAL ENGINEER FOR
STRONG POINT ENGINEERING SOLUTIONS, INC

REV	DESCRIPTION	DATE
2	REVIEW COMMENTS	08/27/21
1	SITE PLAN REVIEW	07/21/21

STRONGPOINT
ENGINEERING SOLUTIONS, INC
340 MANLEY STREET, UNIT 2
WEST BRIDGEWATER, MA 02379
(508) 682-0329

PROJECT NUMBER:	2009–006
DATE OF ISSUE:	MAY 17, 2021
SCALE:	1"=40'
DRAFTED BY: SH/MH	CHECKED BY: ED

PREPARED ON BEHALF OF:

GTE MILLIS, LLC.
251 N. PEARL STREET
BROCKTON, MA 02301

SPECIAL PERMIT PLAN
FOR
PROPOSED CULTIVATION FACILITY

1480 MAIN STREET
MILLIS, MA

40 0 20 40 80 160
GRAPHICAL SCALE: 1" = 40'

ISSUED FOR REVIEW
NOT FOR CONSTRUCTION

PROPOSED SITE LIGHTING PLAN

L-1

COPYRIGHT © 2021 STRONG POINT ENGINEERING SOLUTIONS, INC.

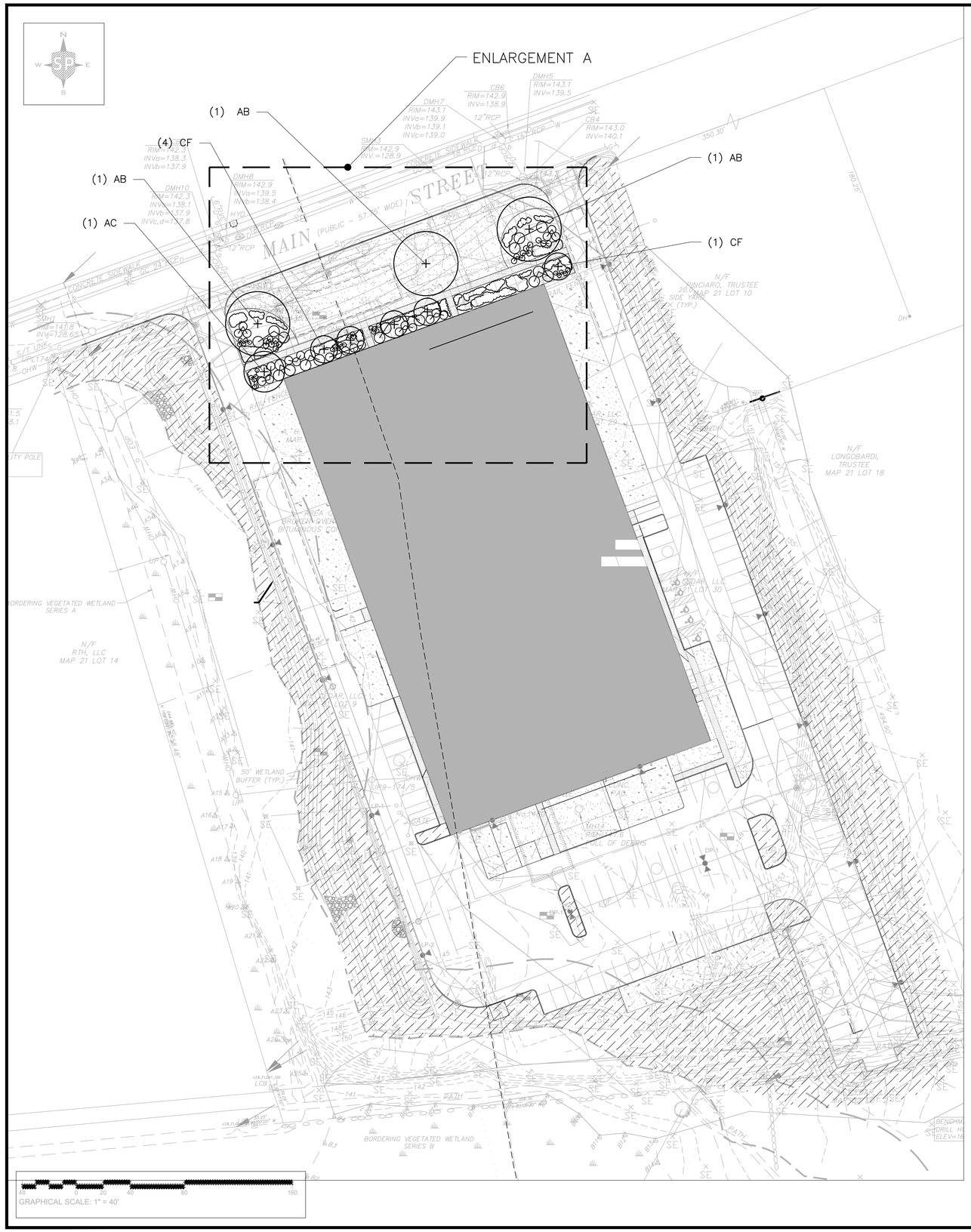

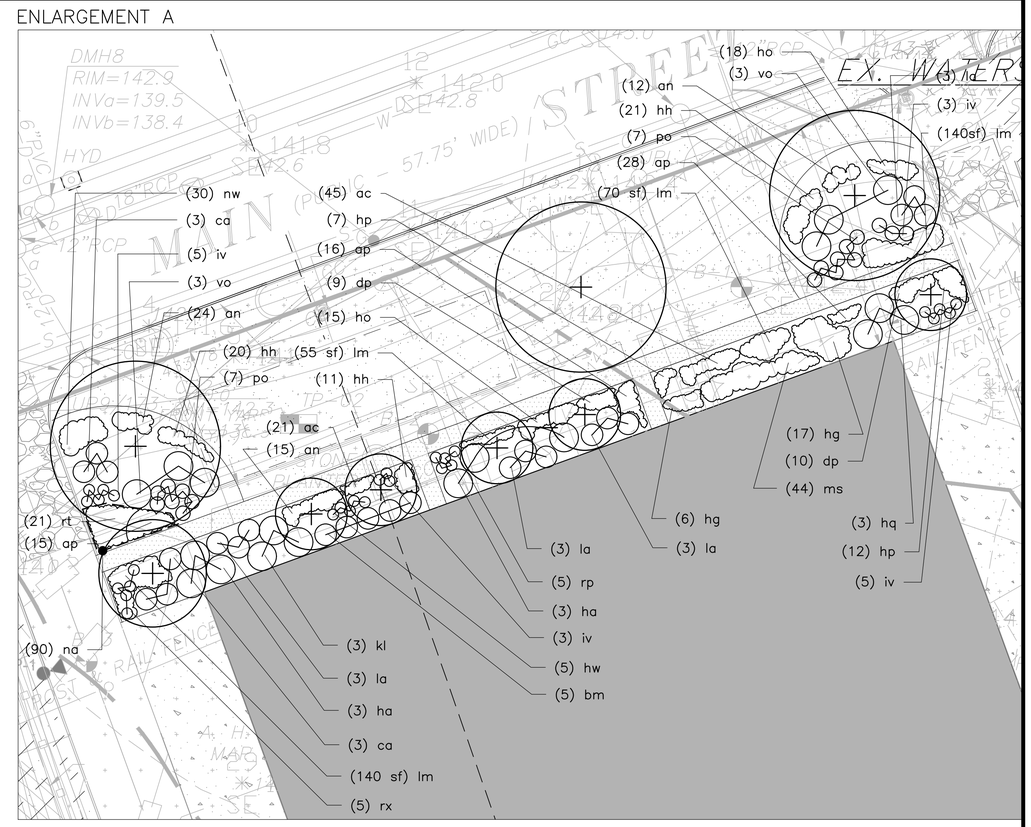

PLANT SCHEDULE

TREES QTY.

KEY		BOTANICAL NAME	COMMON NAME	SIZE	SPACING	NOTES	HEIGHT AT INSTALL	HEIGHT AT MATURITY
AB	3	ACER RUBRUM 'AUTUMN BLAZE'	AUTUMN BLAZE MAPLE	3" CAL.	-	SPRING DIG ONLY	14'-16'	40'-55'
AC	1	AMELANCHIER CAN. 'AUTUMN BRILLIANCE'	SHADBLOW SERVICEBERRY	12' B&B	-		12'	20'-25'
CF	5	CORNUS FLORIDA 'CLOUD NINE'	CLOUD NINE DOGWOOD	3" CAL.	-		10'-14'	20'-30'

SHRUBS

KEY		BOTANICAL NAME	COMMON NAME	SIZE	SPACING	NOTES	HEIGHT AT INSTALL	HEIGHT AT MATURITY
bm	5	BUXUS MICROPHYLLA VAR. JAP. 'WINTERGREEN'	WINTERGREEN BOXWOOD	3 gal.	42" o.c.		15"-18"	3'-4'
ca	6	CLETHRA ALNIFOLIA 'HUMMINGBIRD'	SWEET PEPPERBUSH	3 gal.	36" o.c.		12"-18"	2'6"-3'
ha	6	HYDRANGEA ARBORESCENS	SMOOTH HYDRANGEA	5 gal.	48" o.c.		18"-36"	3'-5'
hw	5	HYDRANGEA ARBORESCENS 'WEE WHITE'	DWARF SMOOTH HYDRANGEA	5 gal.	48" o.c.		15"-18"	1'6"-2'6"
hq	3	HYDRANGEA QUERCIFOLIA 'GATSBY GAL'	GATSBY GAL OAKLEAF HYDRANGEA	5 gal.	48" o.c.		18"-36"	5'-6'
iv	16	ITEA VIRGINIA 'LITTLE HENRY'	LITTLE HENRY ITEA	5 gal.	36" o.c.		15"-18"	2'-3'
kl	3	KALMIA LATIFOLIA 'CAROUSEL'	CAROUSEL MOUNTAIN LAUREL	10 gal.	48" o.c.		36"-60"	6'-8'
la	6	LEUCOTHOE AXILLARIS	COAST LEUCOTHOE	3 gal.	48" o.c.		12"-18"	2'-3'
po	14	PHYSOCARPUS OPULIFOLIUS 'TINY WINE'	DWARF NINEBARK	3 gal.	36" o.c.		18"-24"	3'-4'
vo	6	VIBURNUM OPULUS VAR AMERICANA	AMERICAN HIGHBUSH CRANBERRY	5 gal.	48" o.c.		24"-36"	8'-12'
rx	5	RHODODENDRON X 'HAAGA'	HAAGA RHODODENDRON	3 gal.	36" o.c.	DWARF	12"-18"	3'
rp	5	RHODODENDRON X 'PURPLE GEM'	PURPLE GEM RHODODENDRON	3 gal.	36" o.c.	DWARF	12"-18"	2'

PERNNIALS, GROUNDCOVERS AND BULBS

KEY		BOTANICAL NAME	COMMON NAME	SIZE	SPACING	NOTES
ap	59	ASTILBE CHINENSIS 'PURPLE CANDLE'	PURPLE CANDLE ASTILBE	1 gal.	12" o.c.	
ac	66	ASTILBE CHINENSIS 'VISION IN PINK'	VISION IN PINK ASTILBE	1 gal.	12" o.c.	
an	51	ATHYRIUM NIPONICUM 'PICTUM'	JAPANESE PAINTED FERN	1 gal.	18" o.c.	
dp	19	DENNSTAEDTIA PUNCTILOBULA	HAY-SCENTED FERN	1 gal.	18" o.c.	
hh	52	HEUCHERA HYBRID 'DOLCE SPEARMINT'	DOLCE SPEARMINT CORAL BELLS	1 gal.	12" o.c.	
hp	19	HEUCHERA HYBRID 'PURPLE PALACE'	PURPLE PALACE CORAL BELLS	1 gal.	16" o.c.	
ho	32	HOSTA 'DAYBREAK'	DAYBREAK HOSTA	1 gal.	24" o.c.	
hg	23	HOSTA 'GUACAMOLE'	GUACAMOLE HOSTA	1 gal.	36" o.c.	
lm	405SF	LIRIOPE MUSCARI	BIG BLUE LILY TURF	PLUG	3/SF	
na	90	NARCISSUS	DAFFODIL	BULB	1/SF	MIX, INFILL PLANT
nw	30	NEPETA 'WALKERS LOW'	WALKERS LOW CATMINT	1 gal.	18" o.c.	
ms	44	MATTEUCCIA STRUTHIOPTERIS	OSTRICH FERN	1 gal.	24" o.c.	
rt	21	RUDBECKIA TRILOBA	BROWN EYED SUSAN	1 gal.	18" o.c.	

LEGEND

LAWN

NO–MOW SEED MIX

REV	DESCRIPTION	DATE

kzla
36 Bromfield Street Suite 202
Boston, MA 02108
617 451-1018 Tel
www.kyleizick.com

PROJECT NUMBER:

DATE OF ISSUE: 07/30/2021

SCALE: 1" = 40'-0"

DRAFTED BY: MD CHECKED BY: DDD

PREPARED ON BEHALF OF:

GTE MILLIS, LLC.
251 N. PEARL STREET
BROCKTON, MA 02301

SPECIAL PERMIT PLAN
FOR
PROPOSED
CULTIVATION FACILITY
1480 MAIN STREET
MILLIS, MA

PROPOSED PLANTING PLAN

P-1

COPYRIGHT © 2021 STRONG POINT ENGINEERING SOLUTIONS, INC